TIMBER FRAMING

JOURNAL OF THE TIMBER FRAMERS GUILD

Number 79, March 2006

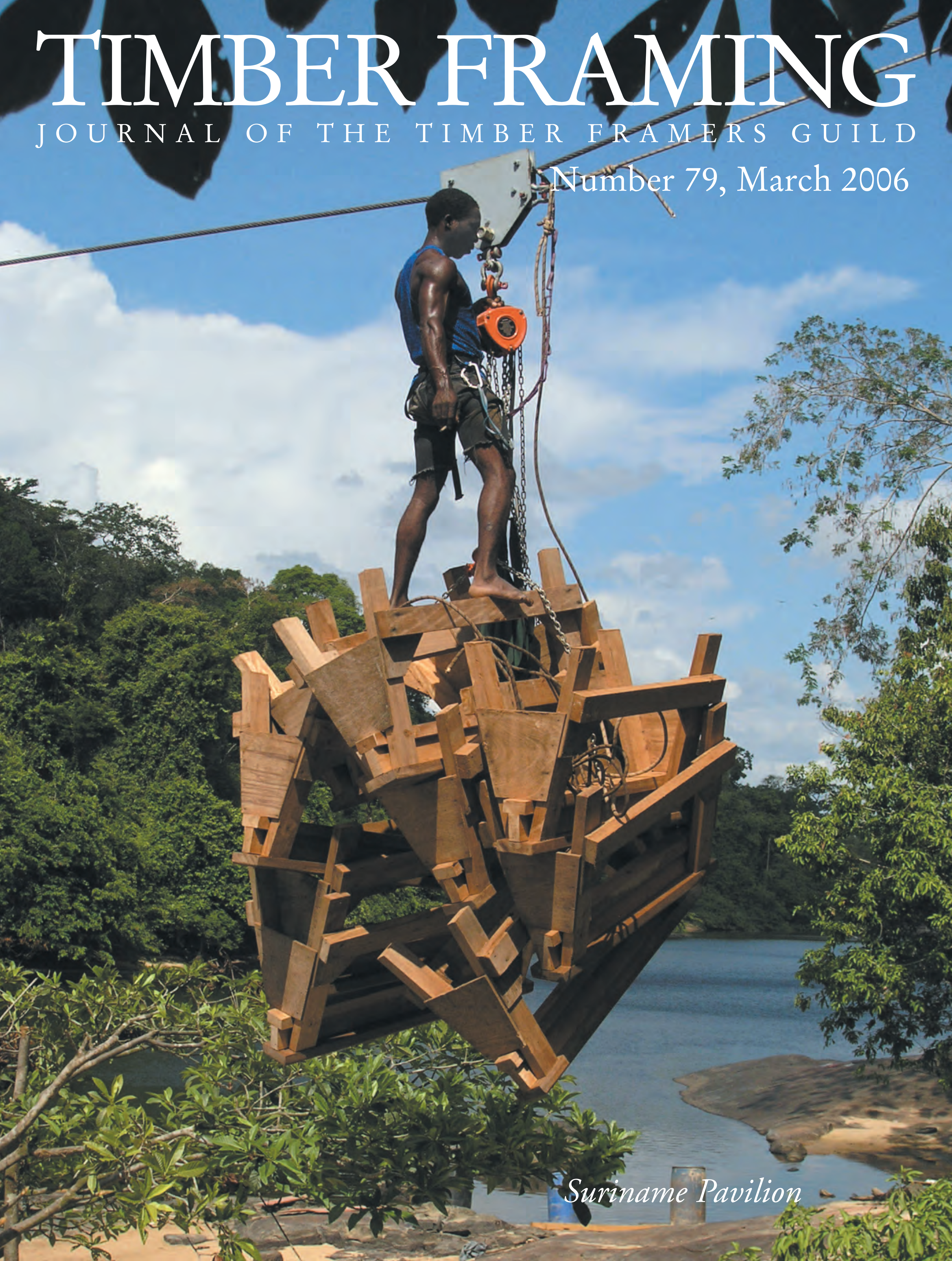

Suriname Pavilion

TIMBER FRAMING
JOURNAL OF THE TIMBER FRAMERS GUILD
NUMBER 79 MARCH 2006

CONTENTS

On the cover, Romeo (aka Soldier) rides a load of sawhorses up the highline to the building site after hoisting them from a canoe. The photographer reported: "The chainhoist had only a 10-ft. handchain, so it was customary for Soldier to don a harness to operate the hoist from aloft, and thus ride the highline down to the canoe and back up. We found this a bit scary!" Photo by Steve Lawrence. Article on Suriname Pavilion, page 12.

Editorial Correspondence
PO Box 275, Newbury, VT 05051
802-866-5684 journal@tfguild.org

Editor Kenneth Rower

Contributing Editors
Guild Affairs Will Beemer, Joel C. McCarty
History Jack A. Sobon
Timber Frame Design Ed Levin

Published Quarterly. Subscription $25 annually (apply to Becket address above) or by membership in the Guild.
ISSN 1061-9860

TIMBER FRAMING, Journal of the Timber Framers Guild, appears quarterly, in March, June, September and December. The journal is written by its readers and pays for interesting articles by experienced and novice writers alike.

1985

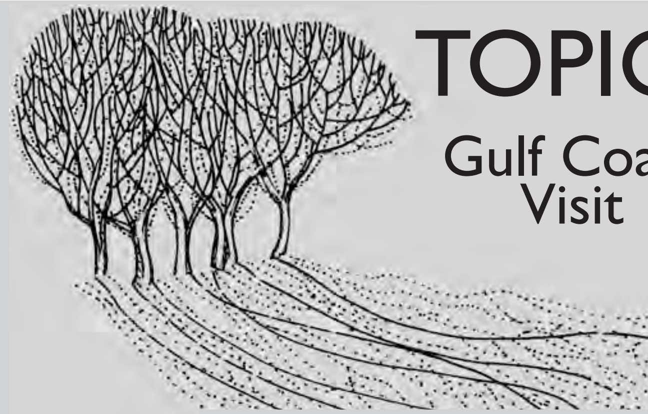

TOPICS
Gulf Coast Visit

Rudy R. Christian, a director and past president of the Guild, is vice-president of the Preservation Trades Network. On behalf of PTN, he traveled late last October to the Gulf Coast with Morris Hylton of the World Monuments Fund to scout out worthy restoration projects.

TO say that you had to be there is a gross understatement. The truth of what happens when a city as large as New Orleans is evacuated while major portions of it flood doesn't strike you until you realize that what's left must look like the neighborhoods outside of the blast range when Hiroshima was hit with nuclear explosions. The houses, gas stations, stores, street signs, billboards and classic New Orleans architecture are still there, but in most neighborhoods there are no people. Traffic lights are not working. The gas stations are closed. Houses sit empty with abandoned cars outside. You drive into the neighborhoods and notice that car windows are filmed over with mud and toxic slime left behind as the water receded. You look in the windows of the houses and see that all the inhabitants' belongings—sofas, chairs, tables and beds—are piled in jumbled masses where they landed when the water receded. Colonies of mold are growing all over sheetrocked walls, and on the windows you can see the high-water marks representing the surface of the temporary lake that had come and gone in minutes, days or weeks depending on the neighborhood.

Where homeowners have been allowed back in, and for others who could afford it, crews have come through and gutted the houses, piling all of the contents in endless heaps along the curbs, suggesting housing developments built on landfills without covering the fill. The acrid odors of rotting garbage, rotting fabric, vegetation and the smell of the slime itself stick in your nose as a constant reminder that this is not like anywhere you have ever been before. In many neighborhoods the garbage hasn't yet come out of the houses. Many of these buildings have lost their very souls. The people who once lived in them, their stewards, have been removed by a powerful force, the combined effect of nature, government, economics and time. For many buildings, their stewards will never return. In New Orleans, this is the real disaster to face.

In some parts of the city life is returning to normal. In the historic districts built on the higher ground, very little damage occurred. In the French Quarter you can walk down to the Café Du Monde and buy a cup of chicory coffee and a pastry, enjoy the warm sunshine and for a moment start to wonder if there really had ever been a visitor named Katrina at all. That's until you turn around and see the "Disaster Relief" van from Texas parked across the street. If you take a drive, you quickly realize that the normalcy of the French Quarter is a thin veil through which a stark reality can be seen by looking in any direction.

Our presumption based on news reports of what was happening in the city, alleged red-tagging and demolition of historic structures by the Federal Emergency Management Agency, proved inaccurate and ill-informed. (Adam Nossiter in *The New York Times* of

October 20, 2005, quoting city and federal officials, had initially reported "30,000 to 50,000 of the city's houses will probably have to be demolished.") What was happening in the efforts toward "recovery" was a moving target and could not be understood at a glance. We needed to go out and see the city firsthand.

The process of deciding which buildings (if any) that hadn't been demolished by nature would be deemed unsafe and torn down began with the city building inspectors and filtered down to the FEMA subcontractors after secondary inspections by FEMA. Instead of the tens of thousands of buildings reportedly slated for demolition, 151 buildings had actually been red-tagged, and FEMA was suggesting ways that even some of those could be saved.

IF KATRINA left New Orleans relatively unaffected by wind damage, she had struck with a vengeance along the coastline east of the city. The force of the tidal surge was also unimaginable until we saw its effects—stretches of causeway bridges with entire sections of roadway lifted off their piers and tossed into the ocean. Inland from the shoreline, debris was evident everywhere you looked, but the real force of the wind was brought home by mile after mile of cylindrical towers with twisted shards of metal where highway billboards once stood. As we got closer to the shoreline, we saw what happens when both a tidal surge and Category 5 winds hit.

To the east of Biloxi is Ocean Springs, an area of numerous historic structures. Many of the shotgun houses have been knocked off their foundations, with little significant damage. (Shotgun houses are simple single-story houses with a floor plan with all the rooms in a straight line from front to back, connected by doors from room to room. It's said the name arose because you could fire a shotgun through the front door and straight out the back.) There is a history of moving such houses back onto their foundations, and qualified contractors exist in the area, although more houses need help than there are tradespeople to give it. It's unclear how many of these homes may be demolished, but efforts are under way to insure they are saved. We did visit the site of a house designed by Frank Lloyd Wright, which suffered significant impact damage. The polygonal guest cottage might have survived had it not been struck by an undermined and uprooted tree. The house itself was moved back roughly 6 ft. from its piers. Although the owners would love to see this house saved, they may be unable to afford to do so since it's not on the Historic Register.

Our second stop in Ocean Springs was the home of the late artist Walter Anderson. We met with members of the artist's community there and saw the remains of three family residences and a studio. Mr. Anderson's home, questionably dated to the 1830s, was tossed off its foundation. Our inspection revealed it would be possible to lift and reset the structure. We also looked at the pottery studios and kiln barns on the site, which sat farthest from the shore and, though significantly damaged, were in restorable condition. This site was a suitable candidate for restoration work.

From Ocean Springs we traveled to Pass Christian, slightly to the east of where the eye of Katrina made landfall—meaning it took the strongest wind and storm surge impact. The devastation was staggering. Entire blocks of buildings were swept away and debris piles were evident as far as the eye could see. Some areas of the historic district had buildings still standing, but none without damage and most of it severe. Complicating any effort at rebuilding this shoreline area, and in particular Pass Christian, is the fact that all of these Gulf Coast communities were connected by railroad and highway bridges that were completely obliterated by the storm. Restoring any sense of normalcy in these areas will take years of rebuilding.

Our final stop was in Bay St. Louis, where the eye of Katrina came ashore. This area has been inhabited for many centuries by Native American people. European influence began in the late 17th century, and the rich cultural and architectural heritage is evident everywhere you look. Unfortunately, the effect of the hurricane was quite significant here. Many newer homes were severely damaged, and entire blocks of traditional shotgun and Creole cottages were nearly obliterated. Numerous examples survive, but whether the necessary money and human determination exist to save them remains to be seen.

We ended up walking along the shore in the North Beach Boulevard Historic District. The shore is a moonscape of broken concrete and asphalt interwoven with the remains of underground utilities and storm sewers. Beyond the shattered roadway sits a row of houses and cottages, many of which suffered catastrophic impact. Much of the fabric of the buildings has been stripped away, and their appearance is some cross between doll houses and architectural renderings of what lies beneath siding and trim. As we walked along a makeshift roadbed scraped from the debris so homeowners and repair crews can get to the structures, I was drawn to the exposed framework of one of the cottages. At a distance, it reminded me of buildings with exposed framing I had seen in England and Germany. Was I having a vision?

Once I got within 20 yards, it became quite clear why I was having this vision—there was a close-studded mortise and tenon wall frame behind the siding. Indeed, I was looking at framework that has its roots in Europe but a lineage in the New World. The more I studied the building, the more I realized it was much older than anything I had observed since my arrival on the Gulf Coast. The owner of the cottage, a Mrs. Noel Fell, came around the corner to ask if she could help. We introduced ourselves, much to the delight of Mrs. Fell, and were immediately welcomed into what turned out to be the family home and, remarkably enough, the place where her 85-year-old mother had sat out the storm.

The house was surprising. Sporting ceilings easily 10 to 12 ft. high, the center hallway opened onto four rooms in a traditional floor plan. The horsehair plaster-on-lath walls were attached via cut nails to framework sawn on an up-and-down mill. The 12-in. baseboard was a single piece of wood apparently molded with a hand plane. When Noel asked why we had such an interest, we asked if she knew the original construction date. She said 1885. Her delight was obvious when we said it was quite likely much earlier.

Stepping out a side door, I found myself nearly tripping over a hand-hewn piece of wall frame lying on the ground next to the cottage. I looked around and found that right next door stood (sort of) a very badly damaged building with every visible framing member hewn by hand and framed very much like buildings in New England and the Midwest. I found that it too had hand-planed finish and trim, including tongued and grooved ceiling boards, made with a handplane, applied to hand-hewn ceiling joists. Discovering that the walls of this building were plaster on accordian lath, I was convinced it predated the Fell family cottage and was very likely cut and raised in the 18th century. By now the Fells and their crew of neighbors had joined our time-traveling adventure. Having never been told how hewing was done, they were quite interested to know we might even be able to tell if the hewer was right or left handed. Mr. Fell piped up to ask (in his straightest face), "So what was the carpenter's name?"

We now found ourselves where we had wanted to be all day: involved with the stewards of the buildings Katrina had attacked, learning that history could be read in the buildings themselves and watching as the belief that these structures should be saved grew moment by moment and discovery by discovery.

—Rudy R. Christian

Since Rudy submitted this report, the 18th-century cottage in Bay St. Louis has been documented, dismantled and put into storage; it will become a Museum. The Phillips cottage next door will become a field school during its restoration; another is planned for New Orleans.

Japanese Compound Layout

II. Hashira Shihō Tate Korobi (Four-way Splayed Post Work)

THIS article is second in a series to explore Japanese compound joinery using *kō-ko-gen-hō* ("rise-run-length-method"). In the first part (TF 78), we considered the angles required to lay out the basic cuts for a hopper with butted or mitered corners: the face cut of the board using the *chū-kō* ("middle-rise") angle, and the edge cut, be it mitered (using *chō-gen,* "long-length") or un-mitered (using "*tan-gen",* short-length). This time we'll examine splayed post work but, before we leave that topic, let's look at other methods of joining the hopper boards.

Carcase dovetailing is one common solution, and a sliding dovetail across the width, called *ari otoshi tsugi*, another. For easy assembly, the dovetail can also be slimmed for the insertion of a long packing pin, rhomboid in cross-section, along one side. Twisted dovetails, *nejiri ari gata,* are also possible. In this case, we will look at a mortise and tenon.

Fig. 1 shows the relationships between the cut angles where our boards meet. Since the two boards join at a compound angle, the joint interfaces become compound as well. One has the choice either to adjust the mortise to accept a rectilinear tenon, or to adjust the shape of the tenon to fit a rectilinear mortise. The chosen solution in this case is to adjust the mortise, but in other cases we can opt to modify the shape of the tenon.

The ends of the mortise, the top and bottom cuts as seen at the surface, are sloped slightly from square to the mortise side-walls, using an angle derived from *kō-ko-gen-hō*. The resulting mortise is a (hollow) parallelepiped, or a rhombus in outline. The tenons are relatively straightforward to process when we reshape the mortise.

To obtain the cut angle for the mortise ends, we turn once again to our *kō-ko-gen* map, Fig. 2. In this example, we will use a run-to-rise ratio of 10 in 4. Using the same methods described in the last article, we find that the *gen* is 10.7703, the *chō-gen* is 9.2848, and the *tan-gen* is 1.4856. Now, make two more divisions of the common triangle, as shown in red. A small triangle results with *tan-gen* as the hypotenuse.

The "*chū-kō*," as it were, of that sub-triangle is called the *shō-chū-kō*, or "small-middle-rise." By taking that measure with a run of 10, we determine the necessary cut angle for our upper and lower mortise walls. We can calculate that measure using similar triangles, or we can use the shortcut given by this formula: multiply the *chū-kō* by the *tan-gen* and divide the result by the hypotenuse, or *gen*. With a 10:4 triangle, the *shō-chū-kō* is 0.5122.

In Fig. 3 we see the soon-to-be-mortised board laid out with the *shō-chū-kō* angle. Take careful note of the direction in which the *shō-chū-kō* slopes: it's easy with such a slight angle to get it backward when laying out. (The same reference line is also marked on Fig. 4.) The board in this instance is 30mm thick and 120mm wide on the outside after beveling the bottom of the board to be flush to the ground. The two tenons are each one-half the board thickness, or 15mm measured perpendicular to the board surface.

The mortise width needs to be adjusted by the unitary hypotenuse of the *tan-gen* angle. With *tan-gen* at 1.4856 to 10, the hypotenuse is 10.1098. Multiplying the tenon thickness of 15mm by 1.01098 generates a mortise width of 15.165mm.

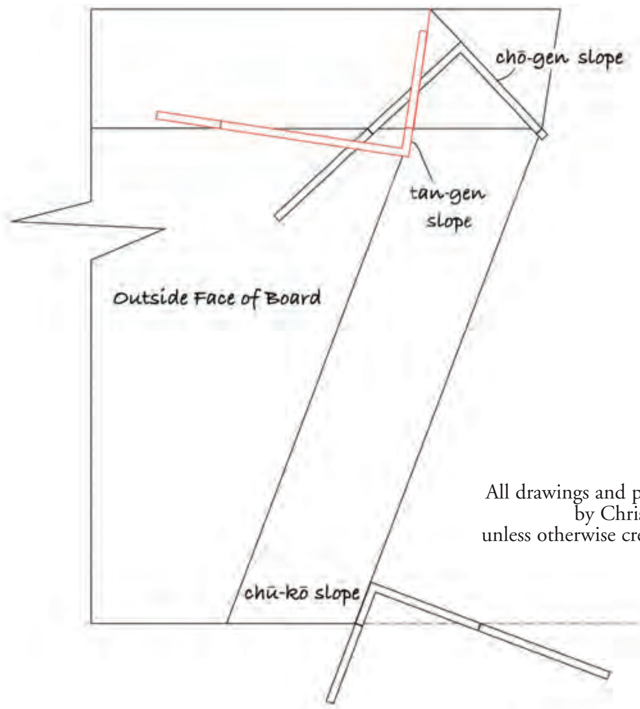

All drawings and photos by Chris Hall unless otherwise credited

Fig. 1. Hopper board cut angles.

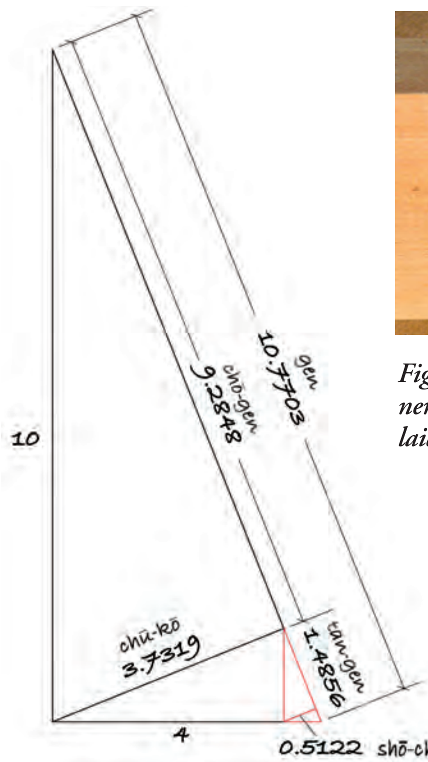

Fig. 2. Kō-ko-gen map.

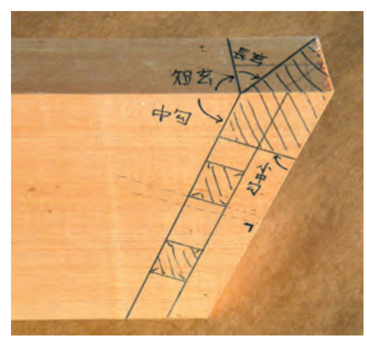

Fig. 3. Mortises and mitered corner laid out. Shō-chū-kō angle is laid off end of hopper board.

Just for fun, let's add a miter at the top edge of the boards. The interface of the miter is also at a compound angle, but we keep one side of the miter rectilinear and modify the other.

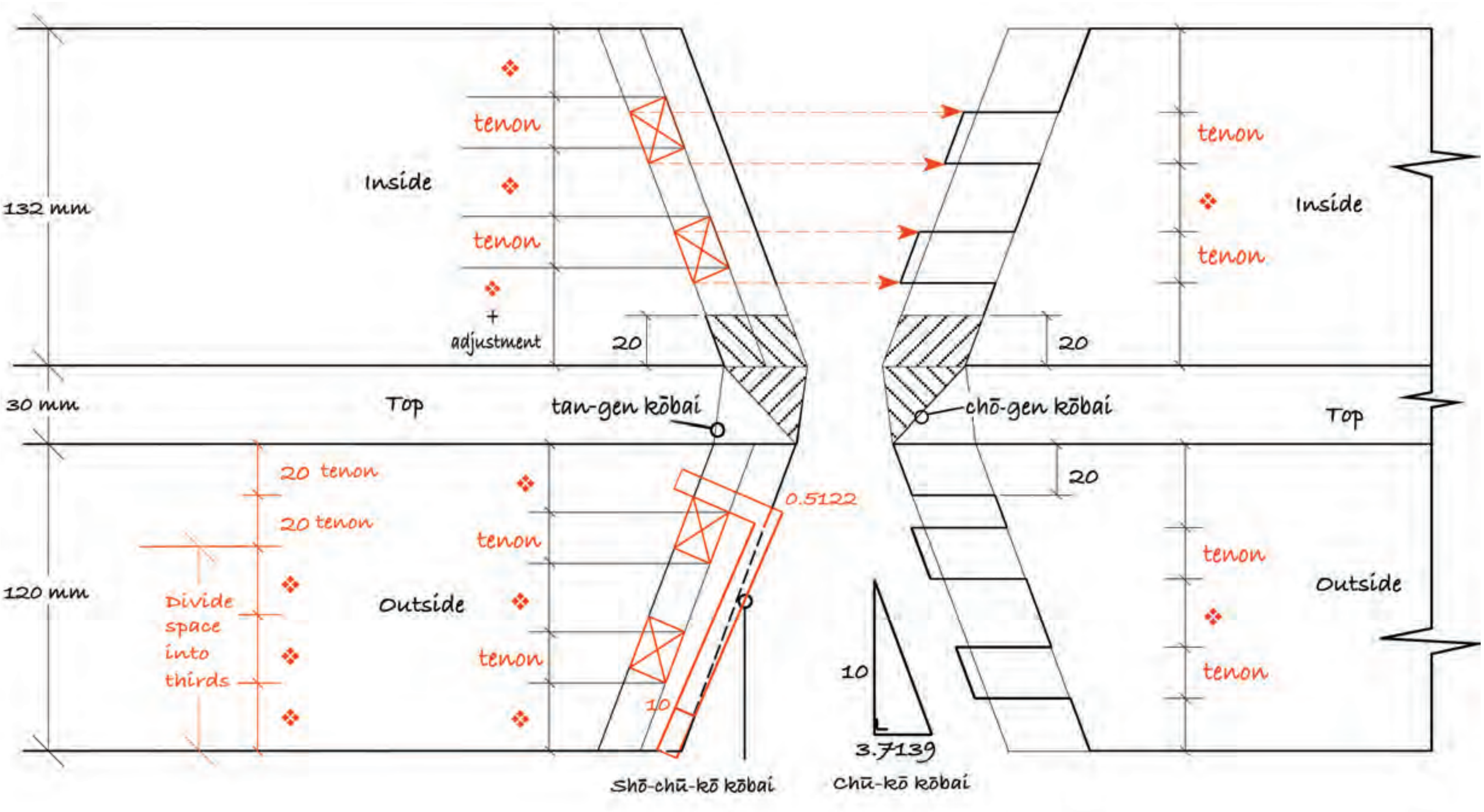

Fig. 4. Complete layout of mortises and tenons at ends of hopper boards.

Fig. 4 gives an unfolded view of the wide faces and the top edge of the hopper boards. The easiest place to commence layout is on the outside face of the mortised board (lower left side of the figure), proceeding to the inside of that piece, then across to the inside of the tenoned board. Combine the measurements for the tenons (20mm each), and mark that distance from one edge of the board. Divide the width of board that remains into thirds to place the tenons at an even distance from the centerline of the board and give equal spacing between them. Now adjust the mortise locations for the slope of the board. Taking the edge of our board as the run, or *ko*, of 30mm, and given the slope of 10 in 4, we multiply the 30mm by 0.4 to get 12mm, the amount we must offset our mortises on the inside of the board.

Note that on the inside face of the board, the undersurface of the miter is laid out with the same *shō-chū-kō* angle as the mortises and as pictured in Fig. 3. From the inside of the mortised piece, transfer layout points to the tenoned piece, inside face; then, accounting for the 12mm height difference, finish by laying out the outside face of the tenoned piece. The red *sashigan*e shows the layout of the *shō-chū-kō* angle. (*Kōbai* means pitch or slope.)

Fig. 5 shows the mortises and tenons cut on a pair of matching hopper board ends, and Fig. 6 the assembled through-tenoned joint with mitered abutment, done in Douglas fir. As with any joinery involving non-orthogonal and thus elongated abutment surfaces, carefully dimensioned and jointed material, along with accurate marking and cutting, are critical to a clean result.

Fig. 5. Mortises, tenons and miters cut at ends of hopper boards.

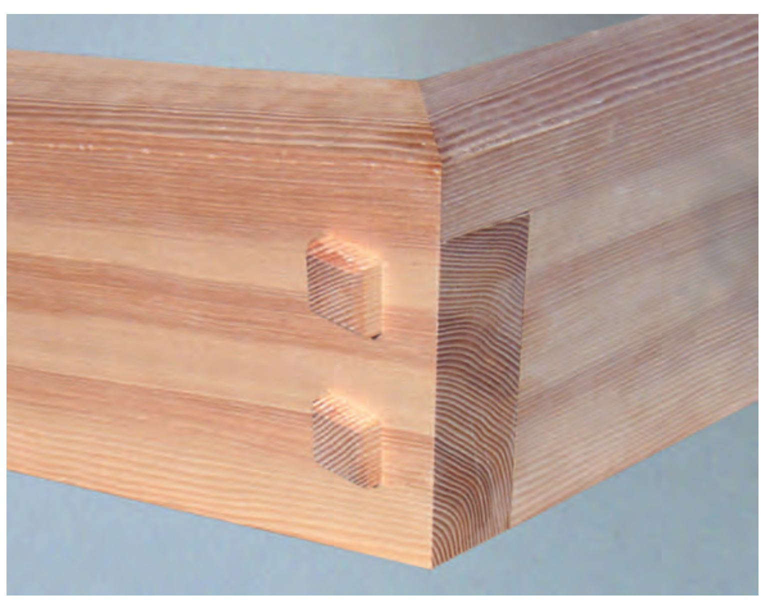

Fig. 6. Assembled joint with decorative chamfered through-tenons.

Four-way Splayed Post Work: The Sawhorse

WHILE the *shō-chū-kō* angle in mortise and tenon joints may appear to have limited application to timber framing, it's important to recognize how such a cut angle is used, for it recurs particularly in splayed post work. Splayed posts or legs line the inside of large hoppers, support sawhorses, steeples and bell towers, and might be used in any structure with sloping walls forming a truncated pyramid. Here we will detail the construction of the form via the humble sawhorse, pictured in Fig. 7 and seen in elevation and plan in Fig. 8. Such a form is equally suited to a stool, a bench or a table.

From the angles so far derived by the *kō-ko-gen* method, we have all the information needed for the cutting of joinery, but there are some other things to consider. The first is the leg section.

A square timber (90 degrees at the arrises) placed against the inside corner of a hopper doesn't fit the interior dihedral angle of the corner: the timber arris might meet the inside corner of the hopper, and the timber might even lie flush to the hopper wall on one side, but then the other side of the timber will angle away from the other hopper wall.

If you take a square-sectioned length of wood and cut the foot square, then place it on some paper and draw the outline of the foot, of course it will form the expected square, and the centerlines of the piece will maintain normal relations. But if you crosscut the

Fig. 7. Completed sawhorse with through-tenoned legs and stretchers.

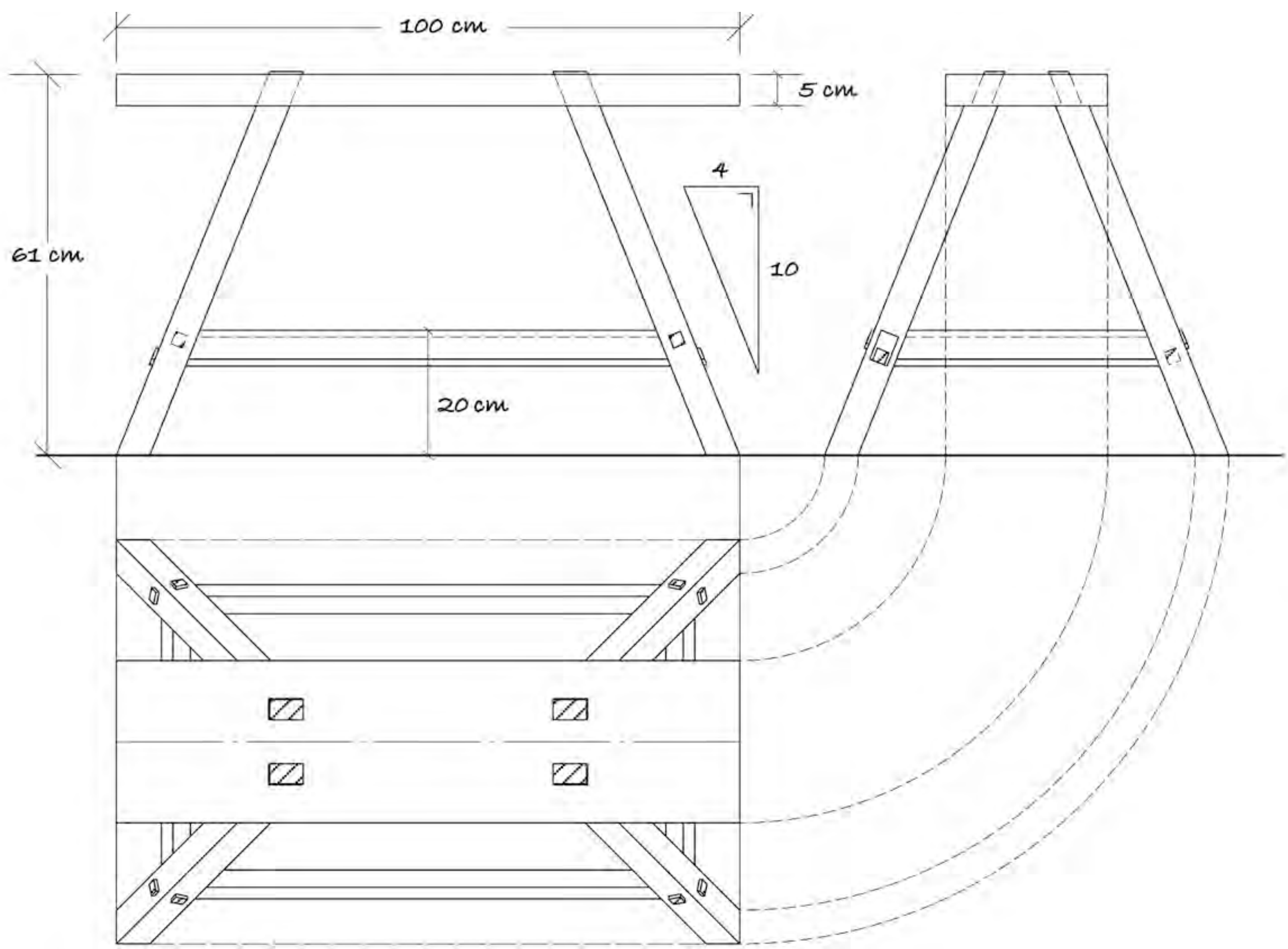

Fig. 8. Plan and elevation views of the sawhorse.

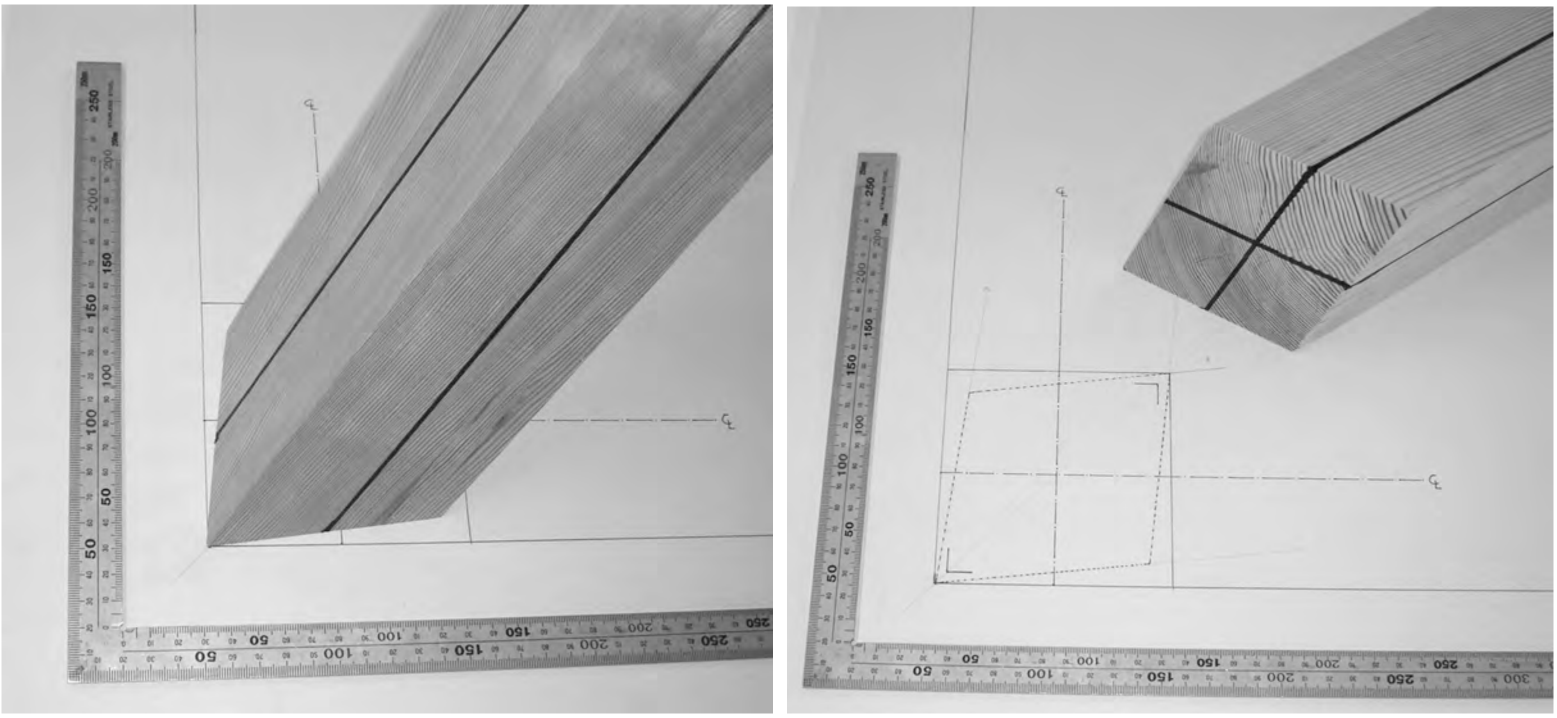

Fig. 9. Square section cut off at non-orthogonal angle yields trapezoidal footprint and non-orthogonal angles between centerlines.

foot at a non-orthogonal angle and place the length of wood on the paper, you will see that it forms a diamond-shaped profile on a level surface (Fig. 9).

The Japanese call this phenomenon *kuse* ("koo-say"). The greater the angle, the more pronounced the *kuse*, for the foot is elongated along one diagonal axis but not the other. In addition, the leg face centerlines are angled out of square to one another when transferred down to the horizontal plane of the paper. This poses problems if you wish to tenon through the legs with horizontal stretchers.

In Japanese timber work, the stretcher shoulders typically show equal reveals at the post face while the protruding through-tenon on the opposite face is centered where it emerges. But since the centerlines of splayed square-section legs are out of square in the horizontal plane, then any stretcher centerline cannot pass through both simultaneously. If the reveals are held even where the stretcher meets the post, then the stretcher's through-tenon must emerge off-center, and conversely. Further, using square-section posts for a splay-walled structure to be planked on the outside means that the planks cannot lie properly against the posts. And, if the post itself is to be tenoned into a sill or a plate of some sort, then the mortises, as with our previous hopper example, must be adjusted.

The solution to these woes is to adjust the cross-section of the leg so that *where it meets the ground* (or any horizontal plane) it forms a 90-degree corner. This process is comparable to backing a hip rafter, except that the leg, unlike a hip, presents an arris as its upper surface, and we will not produce two new surfaces from one as in the case of a hip rafter. (I use "backing" here in the general sense of adjusting one surface so it comes into plane with another.) In our case of joining stretchers with through-tenons, it will prove advantageous to back all four faces of the legs, not just the outer two.

There are several Japanese geometrical methods of determining the adjusted leg section, but first I will use the *futaba-korobi* ("double-roll-out") method to determine the effective slope of the post. As with the hopper, we first decide the common slope, and we will go again with 10 in 4. Since the post slopes four units simultaneously in two directions, the resultant slope is different from 10 in 4. While we showed with the hopper that this slope is determined also by *chū-kō* (and nothing is different in that regard with this example), the graphical method of *futaba-korobi* will prove quite useful when figuring the locations of our stretcher mortises and determining leg length. The effective slope of our leg, given by *futaba-korobi-hō* or using *chū-kō* is 10 to approximately 3.7139 (Fig. 10).

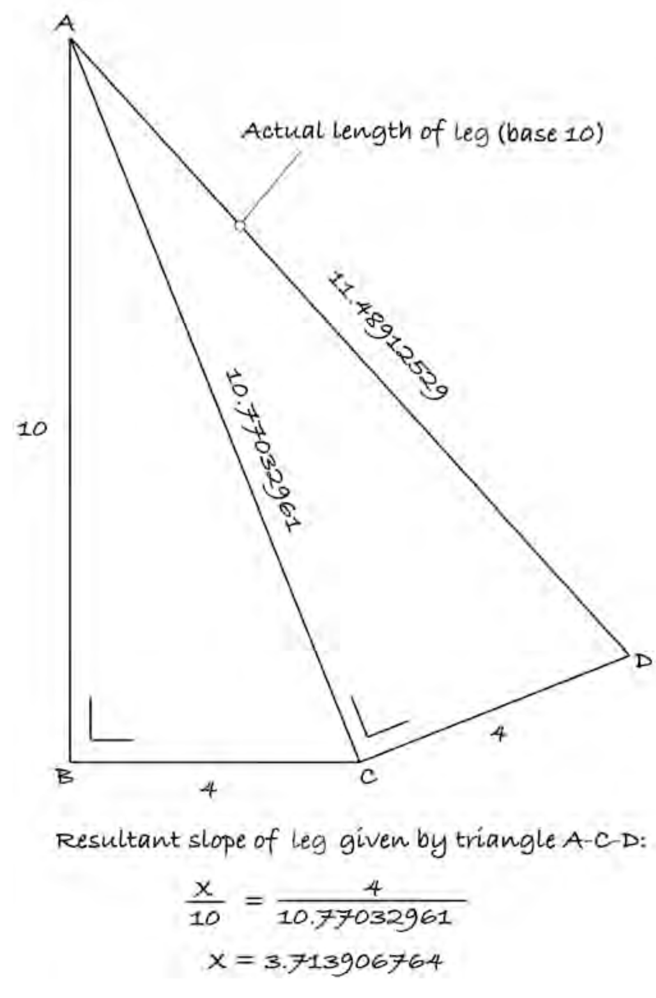

Fig. 10. Finding the resultant slope of leg by futaba-korobi-hō.

Fig. 11 depicts a versatile geometric method that uses the *chū-kō* slope to determine the adjustment of the post section to compensate for the splay. A ground line is drawn with the post meeting it and sloping at 10 to 3.7139. Draw the leg at actual size or preferably larger. For small-section legs, it can be helpful to draw at up to fourfold, particularly when using slight slopes; the closer you get to zero splay, the slighter the amount of *kuse* that occurs. With a larger drawing, it's easier to take accurate angles directly off the drawing with a bevel gauge.

Where a face of the leg meets the ground, it makes a contact length, length A-B . This length is the thickness of the leg stretched by the unitary hypotenuse of the *chū-kō* slope. The hypotenuse of a 10:3.7139 triangle is 10.6674, so we multiply our leg thickness, 5cm in this example, by 1.0667, giving an A-B measure of 5.3335cm. Next, extend perpendiculars of equal measure down from A and B to C and D respectively, and connect them across the bottom to form a square, A-B-C-D, with each side measuring 5.3335. This is the ideal right-angled footprint of the leg where it meets the ground. Construct the diagonal B-D.

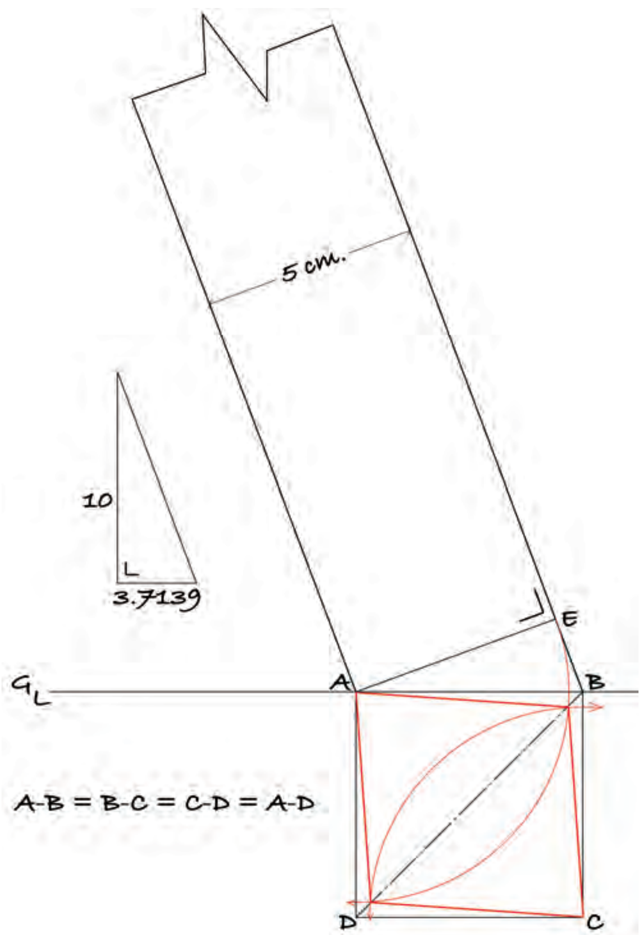

Fig. 11. Adjusting the leg section. Red lines depict desired cross-section of splayed leg to produce a square section taken level through the leg.

The next step is to draw a perpendicular from the side of the leg E to intersect A. This distance A-E is the desired post thickness. Take a compass and adjust it to this measure (5cm) and swing an arc down and through the square A-B-C-D. Keeping the compass setting, place the point of the compass on C and swing another arc. If your marking has been accurate, these two arcs should cross at two common points along the diagonal B-D. Now connect lines from A to these two points, and likewise from C, to form a rhombus. This is the shape our leg must be milled to meet the ground with a square profile. To end up with the desired thickness A-E, our leg stock needs to measure A-B before milling to the diamond profile.

The single most critical step in executing splayed construction cleanly is to shape the post or leg very precisely. My most accurate results come from employing angled sleds to carry the stock through a stationary power planer. For larger stock, other methods such as shimming may be necessary. If hand-planing a leg to shape, be sure to check frequently with a bevel gauge set to the correct angles (there are two, remember) taken directly off the drawing.

Once the legs have been shaped correctly, top and bottom cuts can be laid out. These cuts, like the leg, are angled at the *chū-kō* slope of 10 in 3.7139. Use a framing square, taking 10 on the long arm and 3.71 on the short arm, and mark along the short arm. It's expedient to keep a pitch board (a light-colored, smooth, stable board with one perfectly straight edge; I prefer MDF) to record this and other slopes, to ensure consistent, accurate layout through the job. Mark the *chū-kō* slope at the foot of the leg, making note of which is the outside corner.

From the elevation view of the sawhorse (Fig. 8), it can be seen that the height of the top from the floor is 61cm. The top is 5cm thick, so the height from floor to underside of top is 56cm. Using *futaba-korobi-hō,* we can determine that, given a height *(ko)* of 56cm, the length of the leg multiplied by 1.0667 gives 59.737cm (Fig. 10). So measure 59.74cm along a leg arris from the *chū-kō* line denoting the foot cut, and at that point mark around the leg again with the *chū-kō* slope, orienting the lines in the same manner as for the foot cut. This cut line defines the tenon shoulders on the leg.

The legs pierce through the top rail of the sawhorse with simple centered tenons. To determine the correct length for these tenons, we perform the same mathematical operation as for the top cut. The rail is 5cm thick, and we will in this case add 0.5cm length to make the tenon proud of the top. (If the piece under construction were actually put in service as a horse, these tenon ends would of course be trimmed flush.) Therefore, 5.5cm x 1.0667 = 5.867cm. Again, add this measure along the leg arris from the tenon shoulder line up, mark around the leg with the *chū-kō* slope, and the top cut line for the post has been defined.

Leg tops are tenoned to the top rail generally at one-third leg thickness. Mark out the tenons, taking care to align them in the correct direction for each leg.

The stretchers, or *nuki* (the word is both singular and plural), are 20cm above the floor. When designing the sawhorse, the *nuki* height above floor can be referenced on any arris of the *nuki*; in this case we use the top outside arris. Taking the height in elevation view of the front arris of the nuki to be 20cm, multiply by 1.0667 to get 21.334cm. Mark this height up from the foot along an arris, as before, and lay out the *chū-kō* slope line around the post. Check that all the *chū-kō* lines on the leg lie in the same orientation. Mark the other legs similarly, again making a sign to denote the outside corner of the leg. This sign will help orient the stretcher mortises and the tenons on the tops of the legs.

WE will now set aside the legs temporarily and turn our attention to the stretchers. *Nuki* may be the same thickness as the leg, in which case the arrangement is called *tsura itchi o-sa-me*, or they may have a reveal on either side (*men-uchi o-sa-me*). Generally, reveals are to be preferred, as they help hide wood movement or any imperfections in sizing, but some consideration should then be given to the appropriate size relationship between *nuki* and leg. One convention is to make the *nuki* two-thirds the thickness of the leg. The tenon of the *nuki* is then given as one-third leg thickness.

The next step is to derive the joinery layout of the stretchers, for length, side and face cuts, and tenon configuration. The *nuki* are identical in orientation to the hopper boards previously described, so the same geometry applies to them. That is, the top cuts are given by the *tan-gen* slope and the face cuts by the *chū-kō* slope.

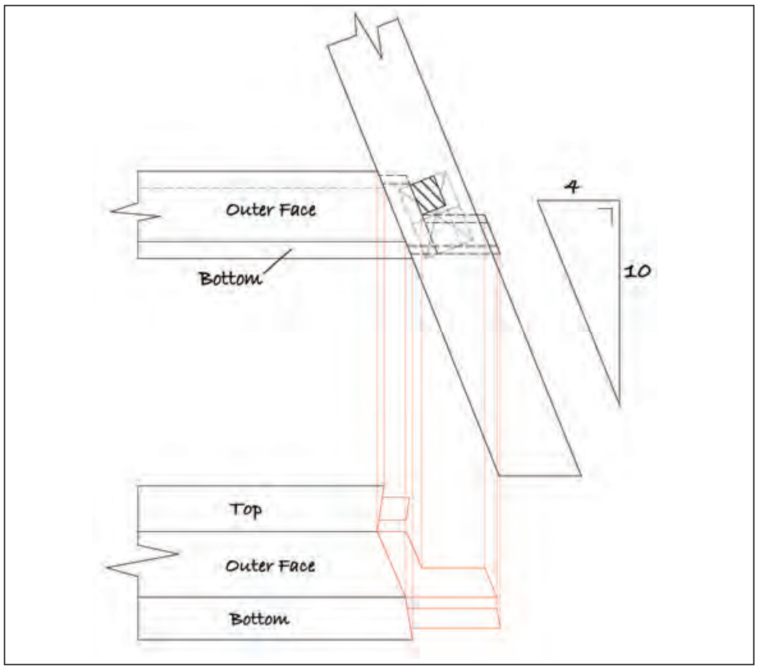

Fig. 12. Graphical derivation of stretcher shoulder and tenon cuts.

Fig. 12 is a developed drawing to show how the latter cuts can be derived graphically (compare the Fig.12 in the last article in TF 78). The drawing is complicated by the many lines (some omitted for clarity) generated from the various surfaces of the tenoned *nuki* where it meets and passes through the post. The post is drawn at the common slope, and the intersection points of the tenon and nuki shoulders are transferred vertically down to an unfolded view of the *nuki* (back face eliminated as all reference angles can be taken from three faces). On the developed view, one can place a bevel gauge and take the necessary face and edge cuts directly. One could equally rely on the *kō-ko-gen* method, using *chū-kō* for the face cuts, and *tan-gen* for the top and bottom edge cuts.

In Fig. 13, getting the correct lengths for the stretchers is a simple affair: since they are in slope with the legs, and since the legs are backed to be in plane with each other inside as well as out, the elevation drawing of the sawhorse gives all the information required. Drop plumb lines down from the points of intersection between the stretcher and the posts 1, 2, 3 and 4, and transfer them to the stretcher points 1′, 2′, 3′, and 4′. Or, equally simple, perform a triangle calculation based on the elevation drawing information to derive shoulder to shoulder lengths on the stretchers.

Fig. 14 illustrates the layout for the haunched tenon on the *nuki*. This figure is fairly self-explanatory, but note carefully how the tenon size is derived on the end grain layout, using the common slope of 10 in 4. The length of the haunch is one-third of post thickness.

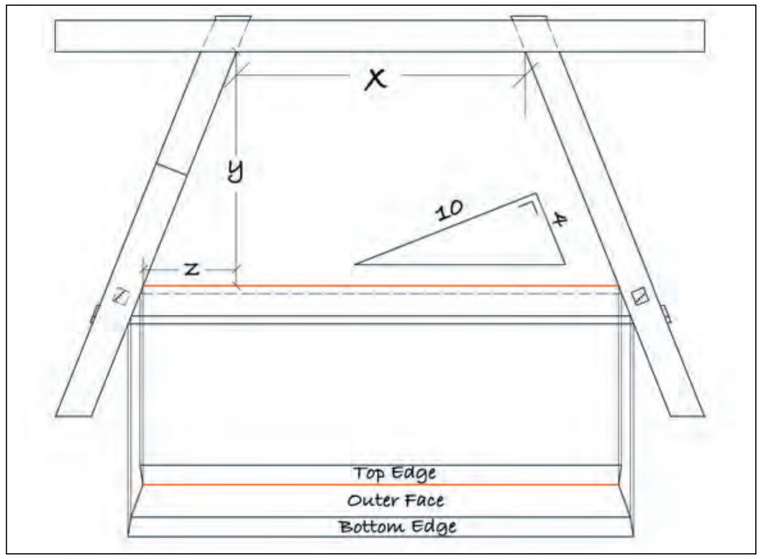

Fig. 13. Elevation of sawhorse gives stretcher length.

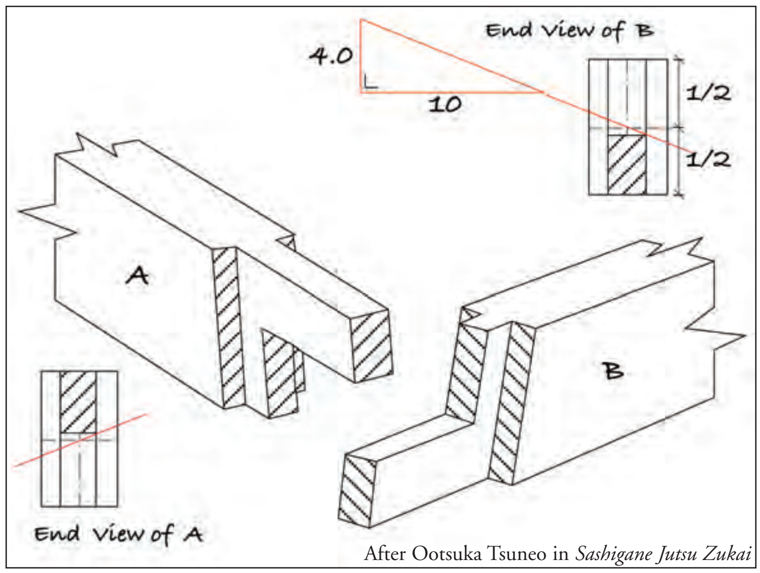

Fig. 14. Views and layout of the haunched tenons.

In Fig. 15, we lay out the mortises on the top rail (the *ten-ban,* or "heaven board") of the sawhorse. Fortunately, this is quite straightforward. Since the leg sections have been modified, the mortises are rectangular, and the layout lines take the common slope and nothing more. The top surface of the *ten-ban* is shown with broken lines indicating the mortises, and the edges of the board are unfolded to show the slope lines. To lay out the mortises on the underside, connect the layout lines from the edges and the ends of the heaven board.

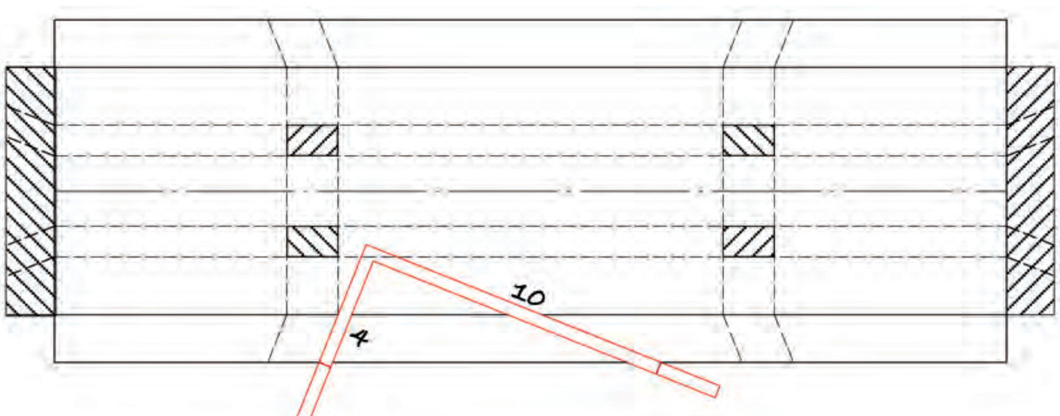

Fig. 15. Mortise layout on the top rail of the horse.

NOW we will return to the legs to lay out the mortises for the *nuki*. *Nuki* pairs can be staggered in height allowing full-height tenons at the legs, but commonly they are at the same level with tenons that lap each other within the leg.

Fig. 16 shows the graphical *futaba-korobi* method for determining the *nuki* height in relation to its position along the leg length. Note that the red arcs are swung to the hypotenuse line of the 10:4 triangle, not to plumb, and that the red line labeled "actual length of post" is sloped at the *chū-kō* angle of 10:3.7139.

Fig. 17 (facing page) is a developed drawing necessary to lay out the mortises. First draw the leg at *chū-kō* slope. Then take the sides of the leg and unfold the leg faces so that you have a view of all four. The outside corner of the leg lies at the center of the unfolded faces. The two faces to the left in this example meet the floor, while the two faces opposite take the *chū-kō* slope in relation to the leg centerlines. Notice the line that squares over on the bottom of the drawing from outside corner left, A, to outside corner right, B; it confirms that the foot cut layout lines are correctly oriented.

Mark the height of the *nuki*, as determined earlier, on the leg, and run the *chū-kō* slope line around the line on the drawing labeled "Upper Nuki Line." The slope line gives a horizontal plane in relation to the inclined leg. Along this *chū-kō* slope line, divide each face into six divisions and extend lines down from these divisions. These lines define the side of the *nuki*, along with the *nuki* tenon cheeks.

The next step is to define the top and bottom walls of the mortises. Recall from the hopper example at the beginning of this article that this slope is defined by the *shō-chū-kō* angle 0.5122 in 10 in the case of a common slope of 4:10. Here we will show the graphical method for coming up with that cut line.

Draw the post at *chū-kō* slope and, on the bottom of the leg, draw in the square footprint and adjusted diamond section of the leg, as described in Fig. 11. Label the adjusted section as before. On the line A-B′, take a line square down to corner D′. Transfer to a compass the distance from corner A to the intersection point labeled F. Swing an arc from A to line A-E on the leg. From that new point on A-E, strike a line parallel to the side of the leg past the *chū-kō* line defining the *nuki* height. The distance A-F is called *kayumi*, or "the added bow" (archery).

Mark the location where the *kayumi* line intersects the upper *nuki* line, labeled G on the drawing. Extend a perpendicular from the *kayumi* line to the side of the adjacent leg face (point H). From H, reflect the line back across to connect to the arris of the leg, point I. The line H-I gives the correct slope for the upper and lower mortise walls. The proportions for the *nuki* are given here as two-thirds of the leg face—point K denotes the intersection of the upper *nuki* line and the side of the *nuki* itself. (If the *nuki* were to be the same thickness as the leg, then the intersection would be at point I.)

Parallel to line H-I, mark a line K-J to define the top of the *nuki* at the leg surface. The *nuki* is to be 5cm in depth, so from point K mark down 5cm to give point L. From L, extend a line L-M parallel to H-I to define the lower surface of the *nuki* where it abuts the leg face. Therefore, J-K-L-M defines the *nuki* outline on the post face. Mark diagonals K-M and J-L to determine, at the point the lines cross, the centerpoint of the *nuki*. From this centerpoint, extend a line across leg faces, parallel to the horizontal lines defined by the *chū-kō* slope line.

Since the stretchers are all at the same elevation and meet inside the leg, it's not quite possible to use half-tenons, since the corners of each tenon would interfere with one other. They can be cut, however, so that they meet exactly on one tenon arris. Point N on the drawing indicates the intersection of the lower corner of the mortise (i.e., the lower arris of the tenon), with the *nuki* centerpoint line. Line N-O, parallel to H-I again, gives the lower line for the mortise, and N-O-P-Q defines the complete mortise. The parallelogram P-Q-R-S gives the mortise for the *nuki* tenon haunch.

This procedure, from the establishment of *kayumi* distance to

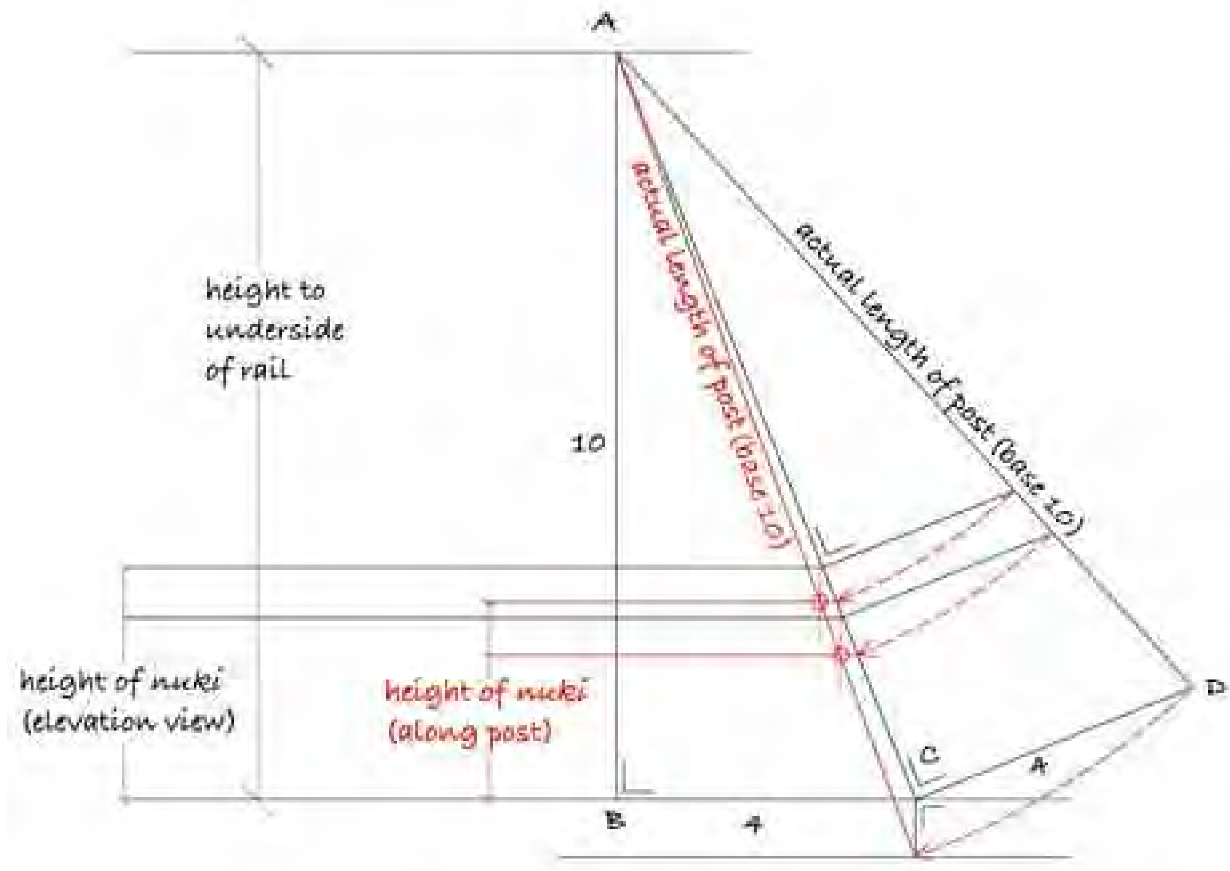

Fig. 16. Futaba-korobi method for finding position of nuki on leg.

the drawing of *nuki* profile, mortise and haunch, is repeated on the opposite side of the drawing as shown. Note how the slope lines developed using the *kayumi* line method relate to each other on either side of the outer leg arris. If you use the *sashigane* to lay out this line with the *shō-chū-kō* slope, take care to keep the orientations of slope lines correct.

Point B on the drawing gives the outer corner for the leg. The outside two faces of the legs, given by sides A-B and B-C, will show the ends of the *nuki* tenons on their surface, so there is no need to lay out the complete *nuki* profile on either surface. The upper and lower lines for the mortises are marked from both centerpoint line and upper and lower *nuki* lines—note the dots on the drawing showing the correct points. Careful attention must be paid to connecting the lines correctly, or the mortises will be the wrong height or depth or both. After all the mortises are laid out on the timber, be sure to compare them for size and visualize how they pass through the leg, to catch any layout errors.

In assembly, splayed structures go together with all pieces drawing together at the same time, little by little. *Nuki* tenons can be secured with pegs or wedges. In a larger structure such as a bell tower, top-wedged half-dovetail tenons or a form of wedged cog joint would be more typical. Through-tenons with extended relish might also be used and through-wedged to the outside of the leg.

In the next article, we will conclude our look at four-way splayed post work, *hashira-tate-shi-hō-korobi*, and turn our attention to regular hip rafter layout using the *kō-ko-gen* method.

—Chris Hall

Chris Hall designs and builds Japanese timber structures and furniture. He currently teaches timber frame carpentry in British Columbia. The drawings in this article are based on Japanese drawing conventions.

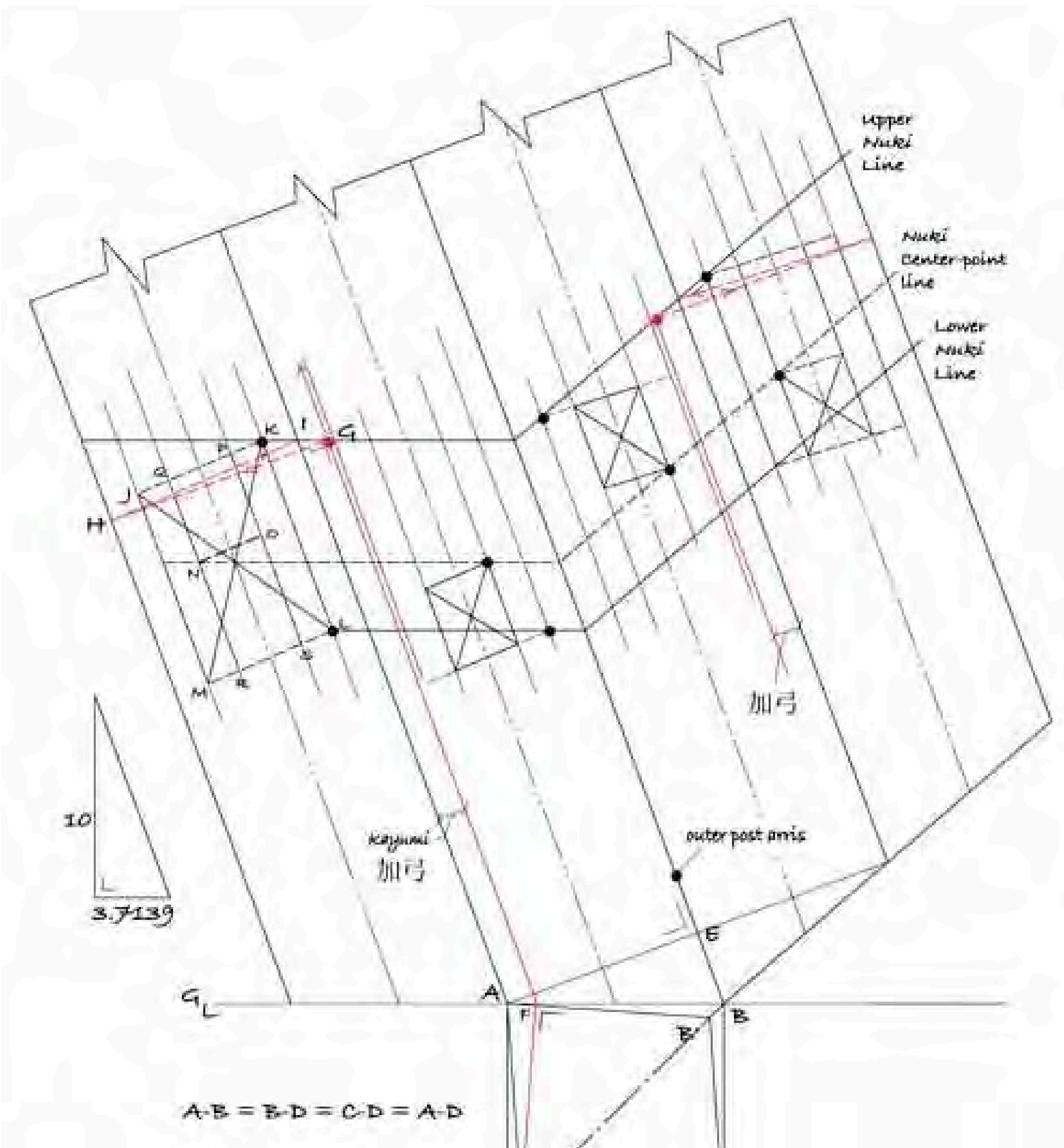

Fig. 17. Developed drawing to lay out the mortises.

A Pavilion in Suriname

Anne Phillips

Fig. 1. Architect Anne Phillips's representative drawing of the building, which measures about 50 ft. at its widest and 131 ft. long.

SURINAME, formerly Dutch Guiana, lies four degrees north of the Equator, sandwiched between Guyana and French Guiana, and bordered on the south by Brazil and on the north by the Atlantic Ocean. It's not a big place. The whole country has a population of just 438,000, about the same size as Spokane, Washington, and it's less than 200 miles across at midpoint. You could probably drive straight across it in about four hours on a good road—but there aren't any, so you can't. And, really, this is what makes Suriname such an interesting place to visit: it's almost completely forested (over 90 percent), and there are very few roads into the interior of the country. With more than half of the population living near the coast in the nation's capital city of Paramaribo, the rainforests that cover the interior of the country are among the most pristine and least populated on Earth.

Conservation International, with headquarters in Washington, D.C., works to preserve biodiversity in 40 countries. It began working in Suriname in 1991 and played a key role in listing the 4-million-acre Central Suriname Nature Reserve as a World Heritage Site in 2000. Today the reserve is known to contain more than 400 species of birds, including scarlet, red-and-green and blue-and-gold macaws, the cock-of-the-rock and the harpy eagle. The reserve is also home to all eight species of Suriname's monkeys, as well as the jaguar, puma, tapir, both the two-toed and the three-toed sloth and the giant river otter. This remote area of the interior is only accessible by four rivers and a short-takeoff-and-landing runway originally cut by the US Army during the 1940s when Suriname's bauxite reserves were of strategic importance to the Allied war effort. Bauxite is aluminum ore. By the end of World War II, an estimated 80 percent of Allied aircraft were made from alloys originating in Suriname. Unfortunately, the extraction of bauxite is a messy business, and this threat to Suriname's rainforests remains very real today.

Only a handful of people live within the reserve, the Maroons, descended from African slaves who escaped their Dutch captors during the 18th century and chose to take their chances in the inhospitable jungle. To provide employment for the local Maroon people and create an alternative to the destructive extraction of natural resources, Conservation International has been developing eco-tourism within the reserve. This effort has been almost entirely focused on a place called Foengoe Island, which lies about 120 miles up the Coppename River at Raleighvallen (Raleigh Falls), in the very heart of the reserve (Fig. 2). CI has greatly improved the island infrastructure over the last couple of years with the introduction of a powerful solar array, septic and waste water systems and reliable satellite communication, and the renovation of existing buildings to provide comfortable tourist accommodation.

The missing piece of the puzzle was a large, covered space suitable for food preparation, communal dining, slideshows, other presentations and the general reception of tourist groups arriving on the island. Project director Chuck Hutchinson was determined to construct a large pavilion that would meet CI's needs for many years to come, and one that would deliver a strong message to the government of Suriname about the potential future of eco-tourism in this remarkable place. An architect and friend, Anne Phillips, recommended timber framing as a sustainable and long-lasting building medium, and produced a representative design (Fig. 1).

While Suriname has a wealth of traditional timber-framed buildings that date back to the days of brief English and then long Dutch colonial rule (see "Timber Framing in Suriname," TF 75), there are few practicing timber framers in the country today, and virtually none with the necessary hand-raising experience to safely erect a building of this size. CI turned to the Guild for advice, and so began a two-year process culminating in the successful raising last November of a three-story frame on what must surely be one

Fig. 2. Aerial view of Foengoe Island in the Coppename River, about 120 miles from the coast. The landing strip can be seen faintly at the upper right side, and the building site is just out of view beyond.

Steve Lawrence

Fig. 3. Unloading sawhorses and timbers from freightboat that had carried them up the Coppename River to Raleigh Falls. Romeo on the highline, Milton standing on the timbers, Rick looking on.

of the most remote and inaccessible building sites anywhere on the planet. That volunteers from the Guild raised this building entirely by hand is a testimonial to the skills and sheer stubbornness of our members.

When CI flew the Guild's Joel McCarty to Suriname in 2004, his advice was to enlist the services of an experienced frame designer and to get some professional timber framers on board to lead the joinery effort. The Guild advertised these positions through *Scantlings*, which led to CI's appointing Springpoint Design (Andrea Warchaizer) to design the frame, and hiring Bear Dance Joinery (Donna Williams and Bob Smith) and Dark Horse Timber Framing (Adrienne Walker) to cut the joinery in Suriname. Once working drawings had been produced by Springpoint, Donna, Bob and Adrienne headed south to begin the joinery. Working alongside four local carpenters led by Surinamer Jarrell Heynes, they spent the best part of five months living and working in the capital city of Paramaribo.

The frame was cut from over 26,000 bd. ft. of kope, brownheart and purpleheart timbers, all species selected for rot-resistance. Unfortunately, some of the timbers were so poorly milled and delivered to CI's temporary workshop in such small quantities that the whole joinery effort was made unnecessarily complex and frustrating. With the shop flow continually changing, there were few opportunities to work the timbers in sequence or to lay out whole assemblies to check joinery in the twisted timbers, an issue very much on our minds when the Guild was asked to develop a strategy for raising the extensive frame.

THE building site is only accessible during Suriname's two wet seasons, when motorized canoes can manage the eight-hour journey upriver to Foengoe Island with cargo on board (Fig. 3). Given that none of our timber species would float, each of the 657 pieces would have to be individually loaded into canoes for the 120-mile journey and then lifted out of the boats and carried up to the building site that lay 20 ft. above and some distance from the boat-landing area. The central area of the pavilion called for 12 principal posts, 10x10s up to 34 ft. long and weighing up to 1800 lbs apiece: these timbers posed a particular challenge. To solve this and other logistical problems, we flew to Suriname to study the problem.

After much discussion, we decided to span the Coppename River with a 400-ft. highline and shotgun carriage that would enable a small crew of locals to lift the timbers from the canoes with a 1½-ton chainfall and then hoist and trolley them up to the building site (Fig. 3). Grigg Mullen helped with a design for the highline, and Troll McCook oversaw the installation on site.

The Guild and CI eventually agreed that 16 Guild folk would travel to Suriname and join 12 local carpenters and laborers on site to erect the building by hand in a three-week push during November, with completion targeted for Suriname's Independence Day, November 25th. Experienced framers Rick Collins, John Miller and my partner Steve Lawrence and I, with support from Adrienne Walker who was still busy working in Suriname at this stage of the game, would lead the effort. The call for volunteers drew more than 50 applications from five countries. With so many

Steve Lawrence

Fig. 4. Monsoon conditions. John (at the hoist), Rick and a hooded Adrienne selecting 34-ft.10x10 timbers for bent assembly.

people applying for positions on our limited site crew, the selection process was tricky indeed. We were mindful that the crew would need to live and work together continuously for three weeks at an extremely remote site and under stressful environmental conditions. It would be essential to get the chemistry of our crew just right, so we drew up a list of criteria including requirements for not only technical skills and physical fitness, but also a sense of humor and experience working on a team and in the wilderness.

Using this semi-objective process, we selected our crew and began to arrange for southbound flights. It should be noted that Suriname is not exactly a bustling hub of international travel. With crew arriving from 16 different cities on two continents, this task just about drove us to the edge. Some of our crew required five flights to reach Paramaribo, while others spent as many as three days in transit. Meanwhile, our leaders began drawing up list upon list of tools, fasteners, lifting tackle and other equipment that we would need for the event and started to assemble these items at three locations within the US. The tools and equipment would ultimately be assembled in locked gangboxes and sent south from Miami by sea. (Hand tools would accompany the crew as checked luggage.) Upon clearing customs in Paramaribo, three huge boxes would be taken overland through the jungle to a place where a seasonal logging road crossed the Coppename River by bridge, and then lowered from the bridge into waiting canoes for transport upriver to Foengoe Island. Adrienne Walker, who supervised this task, would later describe her epic adventure of swimming one of the floating plywood gangboxes into mid-river, where it could be reached by the highline before being swept away by the current. Adrienne was to be no stranger to soaking conditions, nor were any of the rest of us (Fig.4).

Every component of the raising required planning to ensure that we would have the right equipment on hand when our crew needed it on site. There was no room for error in this early planning stage, as we had only one chance to ship our 5500 lbs. of equipment south in time for the event. Every item had to be identified, purchased, packaged, scheduled for insurance and shipped to our Miami warehouse within a two-week window. Fortunately for us, Rick Collins had learned a trick or two about logistics during his time with the US Marine Corps Combat Engineers, and he was able to make short work of this formidable task.

Detailed planning was particularly important for determining the lifting tackle and rigging that we would need to raise the various frames. We chose 4000-lb. and 8000-lb. Griphoist winches for our main lifting power, with the working lines passing over a pair of snatch blocks fixed to the assembled frame. Initial lifts were accomplished with the help of a site-made A-frame (Fig. 9 overleaf).

Steve Lawrence wrote a detailed lifting plan and identified each item of tackle required (every sling, shackle, pulley and brace was itemized) for our 12 major lifts. This information was driven by the weight of each pick and the unique geometry of each lift: center of gravity calculations were done for every cross-frame, and the data used to determine the required capacities of our equipment (safe working loads) and the line or sling lengths that we would need. But nothing ever goes exactly according to plan, of course, and the ability to perform these lifting calculations on the fly would later prove invaluable to our team.

ON November 4th, after two years of planning and consultation, the Guild flew its leadership team to Suriname at last. John, Rick and Steve flew on immediately to the site to lay out the slab, while Adrienne and I awaited the arrival of our crew over the next few days. Communication was established between our base in Paramaribo and the site via e-mail, and we logged in at least twice a day. It quickly became apparent that we were missing a great deal of scaffolding, ladders, lumber and other items that we would need for the raising. To make matters worse, a key piece of equipment, our telescopic Roustabout, was still stuck in Surinamese customs. The Roustabout is a hand-operated

Fig. 5. Assembled end-bent readied for raising via winches pulling over unseen A-frame fulcrum. Note metal base for post foot.

lifting machine used to lift small loads vertically within awkward or restricted work areas, and it would be essential for our placing the ridge beams and rafters throughout the building's three wings. Its mast appears in Fig. 8 overleaf.

Finally, after a dusty overland bus journey from the capital and an eight-hour canoe journey up the Coppename River, our whole crew was assembled on site for the first time on the evening of November 9th. As we milled about the kitchen shack that night, listening to the sounds of the jungle that surrounded us in every direction, many of us were meeting one another for the first time. It seemed such a remarkable achievement just to have arrived here safely from so far away, and with all of our equipment intact (except for the missing scaffolding and the Roustabout). We now had just 17 days remaining to raise 141,000 lbs of timber and lay over 15,000 ft. of Greenheart flooring.

After completing the formalities of our site induction and safety briefings (remember to check mortises for sleeping tarantulas; avoid being eaten by piranhas), we split into small groups with specific responsibilities: frame assembly, raising and rigging, flooring and so on. With midday temperatures soaring to 104 degrees F, the heat was our enemy and the cool river became our friend. It didn't take long for us to lose any inhibitions that we might have had about sharing our afternoon swim with the piranhas and electric eels that inhabit the tea-colored Coppename River. (In fact, I think it's fair to say that we all became quite fond of piranhas, cooked as fritters on several occasions during our stay.) We began our days before sunrise and worked for an hour each morning before breakfast in order to get the most out of what little cool air there was to be had. We held dawn briefings to establish targets for each day's production. We generally aimed for 10-hour days but soon realized that many of us just couldn't work through the heat of the afternoon. We adapted by taking a two-hour swim break each afternoon, and this worked well for several days before the arrival of the first rain of the season. (Oh boy can it rain in Suriname!) The days typically ended with a delicious communal meal and a recap of the day's events. A slide-show or DVD projected onto a sheet in the cook shack often followed.

We had procured two-part, hinged metal post-base connectors (designed by Ed Levin), to locate the posts during the raising and then serve as holddowns. To take advantage of two previously existing foundation pads, the building comprises three connected frames abutting one another at (subtle) non-orthogonal plan angles. Additionally, the central frame is tapered in width by several feet along its length. These anomalies meant that accurate layout of our post bases would be extremely important to the raising and that the layout and subsequent drilling of the anchors might present a bottleneck in our schedule. But, in the end, the hinged anchors worked exceptionally well for us (Fig. 5 above and Fig. 7 overleaf).

By November 15th, we had both outlying wings of the building up without their ridges and rafters. We even raised the final of these ten bents by the light of a full moon and accompanied by live music. There was further cause for celebration that day when the project architect Anne Phillips flew to the site with our Roustabout. Our 16 crew and half-dozen local helpers were by now working as a coherent team, and we were cruising through the work, but we were still feeling handicapped by the lack of equipment and unsure whether we would manage to complete the building on time.

Poor quality scaffolding, missing ladders and the absence of our Roustabout had forced us to abandon our preferred sequence of frame erection and consider other options. We thus chose to fortify a central part of the frame and use it as a tower from which to pull up the two largest bents, calculated to weigh 13,000 lbs. The limited line-lengths on our Griphoists meant that we would need to pull from very high in the frame, and we made a temporary working deck at 30 ft. John and Steve led the team through one after another seamless lift. Without exception, the assemblies went up slowly, quietly, and yes, even rather boringly—exactly the way a hand-raising should be.

Fig. 6. Mid-raising, a 12,800-lb. frame for the central section is pulled into place.

Photos Anne Phillips except two below

Fig. 7. Close-up of hinged holddown for post.

Fig. 8. The indefatigable, indispensible, fully rigged Adrienne Walker, setting rafters.

Steve Lawrence

Fig. 9. Bent 12 raised with help of A-frame.

Fig. 10. Gord Macdonald rigs Roshano for work aloft.

Gord Macdonald

Fig. 11. Anne Phillips recording the scene.

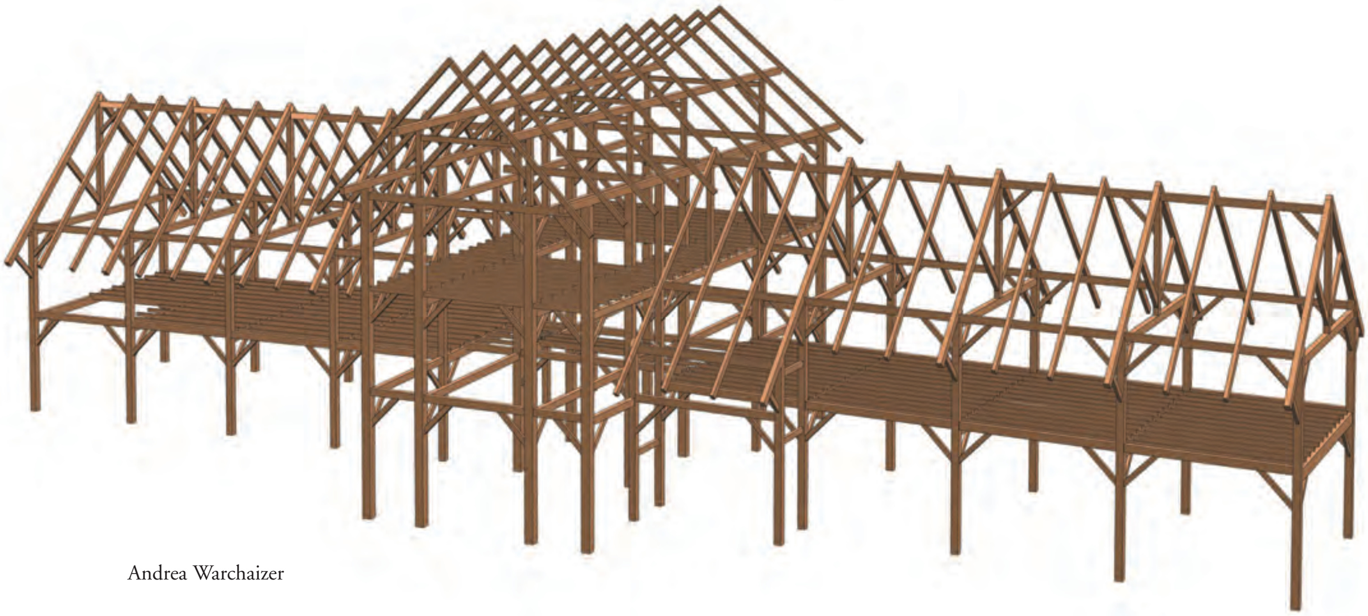

Andrea Warchaizer

Fig. 12. Frame designer Andrea Warchaizer's perspective view of the 26,000-bd.-ft. frame. Though roofed over, most of the frame is unsheathed.

The Camera of Anne Phillips

Fig. 13. Anne and Chuck ham it up toward end of raising.

After Anne's arrival, and with our Roustabout finally in hand, we began to double-shift. By splitting the crew and staggering our rest days we were able to ensure that the lift machine was kept working all day every day. The bulk of our work was now taking place above the top plate level and well above the ground, but we had prepared for this by training our crew in the basics of fall protection over the preceding weeks (Fig. 10). The main obstacle was simply avoiding stepping on one another's toes. Finally, on the evening of the 23rd, we set the final timbers and knew that we could enjoy an extra day off. The job was substantially complete, and Chuck Hutchinson didn't hesitate to sign it off on behalf of Conservation International. We had beaten the odds.

Lisa Helmer and Andrew Preston topped-out the frame on the morning of Suriname Independence Day while James Chitty read his dedication of thanks to the assembled crowd. Following the ceremony we immediately began to concentrate on our impending homeward journey. We had chartered a pair of Russian-made Antonov aircraft to fly our crew and equipment back to Paramaribo, but the payload was restrictive and we knew that it was going to be a tight fit. The key thing was to balance the loads equally between the two flights, so we carefully weighed and recorded each person, the luggage and all of our tools. This information was compiled in a spreadsheet and used to determine what gear would be loaded onto each aircraft. Chuck, Adrienne and I flew out a day early in order to prepare for the returning crew, and the team gave us a wonderful sendoff by painting *Blessings! From RV Sranan* across their assembled bottoms and mooning our little Cessna as we departed from Foengoe Island.—Gord Macdonald

Gord Macdonald is partners with Steve Lawrence in Macdonald and Lawrence Timber Framing Ltd., Vancouver Island, B. C., and clerk of the Guild's board. He headed the leadership team for the Suriname project. More photos and commentary are to be found at tfguild.org/suriname and at conservation.org/xp/frontlines/people/11160504.xml.

Steve Morrison

Crew's irreverent sendoff for air travelers departing Foengoe Island. RV is Raleighvallen (Raleigh Falls) and Sranan the local word for Suriname.

Engineering Concepts for Timber and Joinery Design

STRUCTURAL engineering is, in part, the practice of predicting the behavior of structural systems under imposed loads, including snow, floor, wind and dead loads. Design loads are defined by the building codes, as are the design methodologies of many building materials and systems. Traditional timber framing is one exception. We have little guidance from the building codes regarding the performance of all-wood joints and frames. To provide insight into the engineering design process as well as to promote continued dialogue within the timber frame community, this article discusses basic procedures for designing timber members and traditional pegged joinery.

TIMBER DESIGN. There are five fundamental steps in timber design:

1. Analyze frame to obtain design forces.
2. Calculate stresses in the timbers produced by those forces.
3. Compare applied stresses to allowable material stresses.
4. Modify frame or members if allowable stresses are exceeded.
5. Reanalyze the frame to verify design forces and deflections.

Let's explore this process in more detail, with particular emphasis on steps two and three. By analyzing a proposed frame subjected to combinations of design loads, we can obtain the maximum forces each member should see in service. To ensure safe and serviceable performance of the frame, the members and joints must have sufficient strength and stiffness to transmit those forces from member to member and to the foundation. If the design forces exceed the capacity of practical member sizes or joinery, then adjustments to grade, species or size of timbers should be made to increase capacity, or changes to the frame configuration should be made to reduce design forces. The frame is then reanalyzed, if significant changes were made, to confirm that allowable stresses are not exceeded. This is an iterative process. Likewise, frame and member deflections must be calculated to verify that they remain within code-prescribed limits.

When developing a frame analysis model, the particular characteristics of timber frames must be considered. The force and deflection information supplied by any frame analysis is dependent on the relative stiffness of the frame elements. The general rule is that *force follows stiffness:* the more rigid an element, the more load it will tend to carry. Although most structural analysis software will account for member stiffness, relative flexibility at connections is typically ignored unless specifically altered by the designer. Neglecting joint stiffness may be a reasonable assumption for compression joints; however, pegged tension joints can be many times more flexible than their members, and, unless the frame is modified to account for that additional flexibility, the analytic results may not be entirely realistic. Sizeable or numerous joinery housings and mortises, gunstocking, or other large changes in cross-section can also affect the stiffness and strength of members, and these effects should be accounted for when investigating frame behavior and member capacity.[1]

These nuances notwithstanding, we will assume for the purpose of our timber design discussion that a sufficiently accurate frame analysis has been performed, and reasonable member forces obtained. The principles for sizing timber frame members are well established using engineering mechanics and code-recognized wood properties. The design forces are applied to the geometric properties (or section properties, as they are termed) of the timber to calculate the maximum stresses resulting in the wood fibers.

Stress is simply force distributed over an area. In the US, force is commonly given in units of pounds, area in terms of square inches and stress in pounds per square inch (psi). Calculating stress is a means of normalizing the force in a member to units that allow comparison to material properties independent of member size or shape. The applied stresses are compared to allowable material stresses tabulated by species and grade in the *National Design Specification for Wood Construction (NDS)*. Table 4D in the *NDS* provides allowable stresses for common commercial species of timber (Fig. 1).

Table 4D (Cont.) Reference Design Values for Visually Graded Timbers (5" x 5" and larger)[1,3]

(Tabulated design values are for normal load duration and dry service conditions, unless specified otherwise. See NDS 4.3 for a comprehensive description of design value adjustment factors.)

USE WITH TABLE 4D ADJUSTMENT FACTORS

Species and commercial grade	Size classification	Design values in pounds per square inch (psi)							Grading Rules Agency
		Bending F_b	Tension parallel to grain F_t	Shear parallel to grain F_v	Compression perpendicular to grain $F_{c\perp}$	Compression parallel to grain F_c	Modulus of Elasticity E	Modulus of Elasticity E_{min}	
DOUGLAS FIR-LARCH (NORTH)									
Select Structural	Beams and Stringers	1,600	950	170	625	1,100	1,600,000	580,000	NLGA
No.1		1,300	675	170	625	925	1,600,000	580,000	
No.2		875	425	170	625	600	1,300,000	470,000	
Select Structural	Posts and Timbers	1,500	1,000	170	625	1,150	1,600,000	580,000	
No.1		1,200	825	170	625	1,000	1,600,000	580,000	
No.2		725	475	170	625	700	1,300,000	470,000	

Courtesy American Forest & Paper Association, Washington, D.C.

Fig. 1. Excerpt from the NDS showing allowable stress values for Douglas fir-larch timbers.

The base allowable stress values must be adjusted to account for duration of load, exposure to moisture, member size and shape and a host of other variables that affect the performance of wood. If the allowable stresses are exceeded, then the member size, species or grade should be changed, or the frame modified to bring all applied stresses within the allowable values. Accomplishing this result within the limitations of available timber sizes, species or grades can be challenging.

Member Forces. We classify member forces as *axial* (tension or compression along the member length), *shear* (planes sliding past each other), or *bending*. Their effect on a timber depends upon their orientation to the grain. Exclusive of joinery, stresses in frame members typically occur and are calculated as follows.

Axial forces produce compressive or tensile stresses parallel to the grain, and both of these allowable stresses are provided in the *NDS*. (In the following discussion, allowable stress is expressed by uppercase letters, calculated or applied stress by lowercase letters.) F_t is allowable tension, and F_c is allowable compression. Applied axial stress is calculated by the equation

$$f_a = P \div A$$

where *P* is the design axial load, and *A* is the cross-sectional area (a section property), which for a rectangular section is simply the breadth (width) *b* times the depth *d* in inches. For example, if the design load for a 12-ft. 8x8 No. 2 Eastern white pine post is 20,000 lbs, the applied axial stress is

$$f_a = 20{,}000 \div (8\text{x}8) = 312.5 \text{ psi.}$$

Although the base allowable compressive stress parallel to the grain, F_c, is 325 psi, the allowable axial stress when adjusted by the column stability factor (*NDS* 3.7.1)—which accounts for the tendency of compression members to buckle under load—is about 293 psi, so this post would actually be slightly overstressed.

Bending forces induce curvature in members, which produces tensile stresses on the convex face of the timber and compressive stresses on the concave. The *NDS* gives a separate allowable bending stress value, F_b, to cover both tensile and compressive bending stresses. This is generally higher than the allowable axial stress values. Maximum applied bending stresses are calculated by

$$f_b = M \div S$$

where *M* is the design bending force (or moment), given in units of inch-pounds, and *S* is the section modulus given by

$$S = bd^2 \div 6$$

for a rectangular section. If the design bending force for an 8x12 No. 1 Eastern white pine beam is 180,000 inch-pounds from roof snow loads, for instance, then the bending stress will be

$$f_b = 180{,}000 \div (8\text{x}12^2 \div 6) = 937.5 \text{ psi.}$$

The base allowable bending stress for No. 2 Eastern white pine, 875 psi, multiplied by a 1.15 load duration factor for snow (*NDS* Table 2.3.2) gives a 1006 psi allowable bending stress; the beam is acceptable as long as it does not sag excessively. Note that, unlike axial stresses, bending stresses are more highly dependent on the depth of the timber than the width; a small increase in *d* leads to a large increase in the section modulus and an efficient reduction of bending stresses.

Shear forces, finally, can act either across (perpendicular to) the grain or parallel to it. Wood is extremely tough in cross-grain shear. Imagine grasping a bunch of straws and trying to tear them crosswise—they will bend and slide past each other long before they break. Similarly, wood will most likely fail in some other manner before the fibers shear across the grain. In fact, allowable shear stresses perpendicular to the grain are not even provided by the *NDS*.

Wood is relatively weak in shear parallel to the grain, however, and failures of this type are more common, particularly at the support points of bending members (beams) where shear forces are high. The maximum applied shear stress parallel to the grain when accompanied by bending (as opposed to direct shear stress that can occur in joinery) for rectangular sections is calculated by

$$f_v = 1.5\, V \div bd$$

where V is the shear force in pounds. This equation has been simplified for rectangular members; it looks different for non-rectangular sections. The *NDS* includes allowable stress values for shear parallel to the grain, denoted as F_v.

In real service conditions, many timbers will be subjected to simultaneous combinations of axial, bending and shear forces, whose resulting stresses can be additive. Posts with axial loads as well as bending from lateral knee brace loads are a familiar example; the bending reduces the axial capacity of the post because it encourages buckling and increases the compressive stresses on one post face. Another case involves plates supporting untied common rafters that exert both downward force and outward thrust. This causes bending about both the vertical and horizontal axes of the plate. This "biaxial" bending can create high compressive and tensile stresses at opposite corners of the plate.

The *NDS* provides several other species-specific wood properties to aid us in timber design. Allowable compressive stress perpendicular to the grain, $F_{c\perp}$, is also given in Table 4D and based on limiting the deformation of the fibers under bearing loads; it's useful in joinery design. Also given in Table 4D is the *modulus of elasticity*, *E*, a measure of the stiffness of the fibers parallel to the grain that facilitates the calculation of member and frame deflections.

Finally, the *specific gravity*, *G*, is tabulated as an average value by species (*NDS* Table 11.3.2A), and quantifies wood density (given as a fraction of the density of water). It is used to calculate the crushing capacity, or dowel bearing strength, of wood against dowel-type fasteners including bolts, screws, nails, and wood pegs. The *NDS* includes equations and tabulated values (in psi) for dowel bearing strength by specific gravity, fastener size and orientation parallel and perpendicular to the grain ($F_{e\parallel}$ and $F_{e\perp}$, respectively, see *NDS* Table 11.3.2). Dowel bearing strength values are generally much higher than allowable compressive stresses.

JOINERY DESIGN. The lack of explicit code rules and procedures for designing all-wood timber joinery means that engineers and framers must rely on the application of fundamental principles of wood design, recent research, good judgment and tradition. This can be troubling for several reasons. First, modern timber frames are becoming more ambitious and frequently deviate from traditional forms that relied on densely built frames, few crucial tension joints, or greater tolerance of sag and sway. Now engineers are regularly asked to step outside of time-tested conventional practice and design highly loaded frames and numerous critical tension joints. Second, the absence of code rules or industry design standards burdens engineers with greater liability than they would otherwise carry if following established practices recognized by building codes. Third, lack of familiarity with timber framing can occasionally lead a building inspector to overlook the distinctive properties of a timber frame and allow the frame to be built without benefit of an engineering review or, on the other hand, to insist that metal connections be provided based on code design provisions. Finally, joints are usually the weak link in frames because housings, mortises and tenons are cut right at the point of maximum member force. Since joints are the most highly stressed elements in the frame, they can fail before the member does, resulting in the specification of inefficient timbers—larger than they need to be to handle their axial or bending loads.

The first step in designing joinery is to obtain conservative design forces from a frame analysis using reasonable assumptions of joint stiffness. Tension joint stiffness can vary widely depending on a number of factors including joint configuration, species (which establishes a range for specific gravity), number and size of pegs (if pegs are used), workmanship and other factors, so accurate values for joint stiffness are difficult to estimate. According to the principle that load goes to stiffness, *very stiff tension joints carry more load, reducing compressive loads elsewhere. Conversely, very flexible tension joints cause loads to travel to the more rigid compression joints in the frame.* It follows that a relatively high estimate of tension joint stiffness gives conservative values for tension joint design loads, while assuming softer tension joints will lead to conservative values for compression joint design. Until we have a reliable means of calculating joint stiffness, bracketing the design values in this way seems a reasonable approach, but requires multiple analyses of frames using high and low joint stiffness values in the model.[2]

Compression Joinery. Compression joinery is fairly straightforward: forces are transferred through direct bearing. Joist on beam, beam-to-post bearing, knee brace-to-post bearing and post end bearing are common compression joints. This type of joint rarely fails by suddenly falling apart. Rather, failure occurs gradually by excessive crushing of the fibers, such that noticeable deformations impair serviceability or loads migrate to another part of the structure (potentially causing overload there), or both. These characteristics make compression joinery desirable. It is efficient, reliable and not subject to sudden catastrophic failure.

The capacity of a compression joint is calculated by simply multiplying the bearing area by the allowable compressive stress. Alternatively, the applied stress may be calculated by dividing the design force by the bearing area and comparing that to the allowable stress value from the *NDS*. In the case of a beam bearing on a post housing, the effective bearing area must be determined since it's unlikely that the entire tenon length contributes to resisting the beam reaction (Fig. 2).

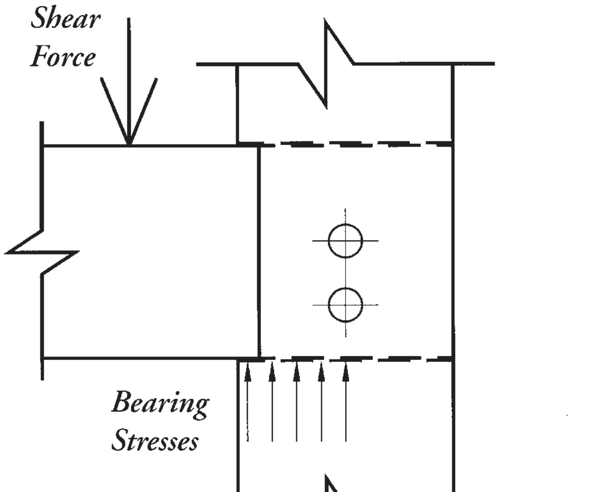

Fig. 2. In a joint subject to compression, effective bearing area may be limited to housing seat plus area under tenon to centerline of pegs.

The assumption you use to determine the effective bearing area will depend on the geometry of the joint. One method allows only the portion of the tenon between the housing and the centerline of the pegs, since mortises often splay out toward the bottom. Keep in mind that it's advantageous to detail ample bearing area as an economical way of achieving a conservative joint design, and because shrinkage of the supporting member (the post) can significantly reduce the available housing depth. Green timbers may shrink perpendicular to the grain approximately 5 percent; for a 10-in. post, this can result in a ¼-in. reduction from each face. A housing depth of ¾ in. to 1 in. can often provide adequate bearing area without unduly reducing the section of the supporting member.

Let's say that the total bearing area is the housing area plus a portion of tenon area. Then the compressive capacity of this joint will be the smaller of two values: the total bearing area times the allowable compressive stress perpendicular to the grain for the beam, or the same area times the allowable compressive stress parallel to the grain of the post. Typically the former value will control, unless two different species or grades of wood are used, for example a No. 1 red oak beam on a No. 2 white pine post.

Angular Joints. Compressive forces at an angle to the grain, such as at knee brace joints or truss heel joints, offer an added complication. The allowable bearing stress at an angle to the grain, F_θ , is established using Hankinson's formula (*NDS* 3.10.3), which calculates a weighted average of the allowable compressive stresses parallel and perpendicular to the grain, where θ is the angle between the line of force and the grain of the member, and the $F_c{}^*$ and $F_{c\perp}'$ indicate adjusted allowable stress values (Fig. 3).

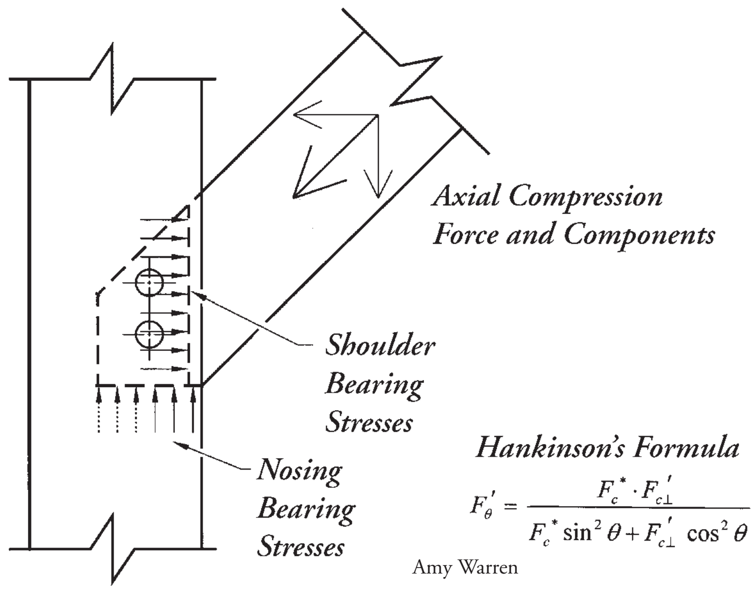

Fig. 3. Hankinson's formula to calculate allowable stress at an angle to the grain.

To design a knee brace joint, the engineer must first break axial force in the brace into horizontal and vertical components, and then check four bearing conditions at each end—at the brace shoulder, the brace nosing, the housing face and the housing bearing end. (Since in practice there is clearance in the mortise at the back of the joint, there is no opportunity to exploit an additional bearing surface there.) The component of the compressive force perpendicular to the nosing surface should not exceed the effective bearing area times *either* the allowable compressive stress parallel to the grain of the post or beam *or* the F_θ of the knee brace nosing. Likewise, the component of compressive force perpendicular to the housing surface should not exceed that effective bearing area times either the allowable compressive stress perpendicular to the grain of the post or beam or the F_θ of the knee brace shoulder.

Generally, the capacity of the combined nosing surfaces controls—particularly for braces steeper than 45 degrees, where a smaller bearing area (under the nosing) will be asked to support a larger component of the load. Note that unless the knee brace is at a 45-degree angle, the two values of allowable compressive stress (F_θ) for the brace at the nosing and the shoulder will be different.

When designing compression joints, two customary rules should be considered. The first is that pegs do not contribute to the capacity of any compression joint; they are too flexible to offer significant resistance before the bearing surfaces engage. Second, pegs (or any fastener) should be placed as close as practical to the bearing surface, particularly for beam-to-post connections such as shown in Fig. 2 (facing page), to prevent subsequent shrinkage in the beam from separating the bearing surfaces and allowing the beam to hang from the pegs, which can split the tenon or reduce the available bearing.[3]

Tension Joinery. All-wood tension joinery design presents additional challenges. Although there are other ways of developing tension joinery, our primary focus will be on wood-pegged joints. To illustrate the difficulty engineers and framers currently face when designing pegged tension joints, let us appreciate the relative ease and confidence with which a steel-bolted connection can be developed. The European Yield Model (EYM) is the method employed by the *NDS* (Appendix I) to calculate steel-fastened connection capacity. It accounts for various failure patterns involving crushing of wood fibers and fastener bending. The *NDS* provides yield (failure) modes (Fig. 4) and yield limit equations, as well as tabulated fastener capacities for bolts, lag screws, wood screws, nails and spikes for various joint configurations (single shear, double shear, wood-to-wood or wood-to-steel plate) and the common spectrum of member specific gravities. Adjustment factors are also applied to allowable fastener forces. Designing a steel-fastened connection is normally as simple as looking up a value in the appropriate table and applying a few factors (Fig. 5).

Bolt layout and detailing distances are typically given as multiples of bolt diameter (*NDS* 11.5). For example, the required end distance from the center of a bolt loaded parallel to the grain toward the end of a softwood member is seven bolt diameters. The *NDS* design values and methods for steel connections have been thoroughly tested in laboratories and in practice for decades, and are referenced by the building codes.

Although there is no such recourse for all-wood joints, the first step toward reliable joinery design is to understand the failure mechanisms. There are four primary failure modes: tenon relish failure, mortise face splitting, crushing of bearing surfaces (against pegs, tenon, or mortise) and, finally, peg shear failure. The first two modes are usually sudden, brittle failures that give little warning, while the latter two are more forgiving and can undergo large deformations without actual rupture of the joint.

Recent research conducted at the University of Wyoming has made great strides toward establishing engineered joinery design standards. Christopher Daniels, Garth Scholl and Joseph Miller, all working under civil engineering Professor Richard J. Schmidt, have published recommendations for the design of mortise and tenon tension joints (see references). Daniels' paper provides bearing capacity equations for peg, mortise and tenon based on the EYM, and proposes a peg shear capacity equation, though without providing an allowable peg shear stress. Miller's paper develops just that. Scholl's paper provides recommended peg detailing distances intended to preclude the two brittle failure modes, tenon shear and mortise splitting (Figs. 6-7 overleaf).

BOLTS: Reference Lateral Design Values (Z) for Double Shear (three member) Connections[1,2]

for sawn lumber or SCL with all members of identical specific gravity

Thickness			G=0.43 Hem-Fir			G=0.42 Spruce-Pine-Fir			G=0.37 Redwood (open grain)			G=0.36 Eastern Softwoods Spruce-Pine-Fir(S) Western Cedars Western Woods			G=0.35 Northern Species		
Main Member t_m in.	Side Member t_s in.	Bolt Diameter D in.	$Z_{\parallel}$ lbs.	$Z_{s\perp}$ lbs.	$Z_{m\perp}$ lbs.	$Z_{\parallel}$ lbs.	$Z_{s\perp}$ lbs.	$Z_{m\perp}$ lbs.	$Z_{\parallel}$ lbs.	$Z_{s\perp}$ lbs.	$Z_{m\perp}$ lbs.	$Z_{\parallel}$ lbs.	$Z_{s\perp}$ lbs.	$Z_{m\perp}$ lbs.	$Z_{\parallel}$ lbs.	$Z_{s\perp}$ lbs.	$Z_{m\perp}$ lbs.
1-1/2	1-1/2	1/2	900	650	360	880	640	370	780	580	310	760	560	290	730	550	290
		5/8	1130	840	420	1100	830	410	970	690	350	950	660	330	910	640	320
		3/4	1350	920	460	1320	900	450	1170	740	370	1140	720	360	1100	700	350
		7/8	1580	1000	500	1540	970	490	1360	810	410	1330	790	390	1280	740	370
		1	1800	1080	540	1760	1050	530	1560	870	440	1520	840	420	1460	810	410
1-3/4	1-3/4	1/2	1050	670	450	1030	660	430	910	590	360	890	580	340	850	570	330
		5/8	1310	950	490	1290	940	480	1130	810	400	1110	770	380	1070	740	370
		3/4	1580	1080	540	1540	1050	530	1360	870	430	1330	840	420	1280	810	410
		7/8	1840	1160	580	1800	1130	570	1590	950	470	1550	920	460	1490	860	430
		1	2100	1260	630	2060	1230	610	1820	1020	510	1770	980	490	1710	950	470
2-1/2	1-1/2	1/2	1100	650	640	1080	640	610	990	580	510	980	560	490	950	550	460
		5/8	1590	840	700	1570	830	690	1450	690	580	1430	660	550	1390	640	530
		3/4	2190	920	770	2160	900	750	1950	740	620	1900	720	600	1830	700	580
		7/8	2630	1000	830	2570	970	810	2270	810	680	2210	790	660	2130	740	610
		1	3000	1080	900	2940	1050	880	2590	870	730	2530	840	700	2440	810	680
	1-1/2	1/2	1100	650	760	1080	640	740	990	580	670	980	560	660	950	550	640
		5/8	1590	840	980	1570	830	960	1450	690	810	1430	660	770	1390	640	740
		3/4	2190	920	1080	2160	900	1050	2010	740	870	1990	720	840	1940	700	810
		7/8	2920	1000	1160	2880	970	1130	2890	810	950	2660	790	920	2560	740	860
		1	3600	1080	1260	3530	1050	1230	3110	870	1020	3040	840	980	2930	810	950

Courtesy American Forest & Paper Association, Washington, D.C.

Fig. 5. Excerpt from Table 11F of the NDS, showing allowable loads for bolted connections in double shear for various bolt diameters, material thicknesses and values of specific gravity.

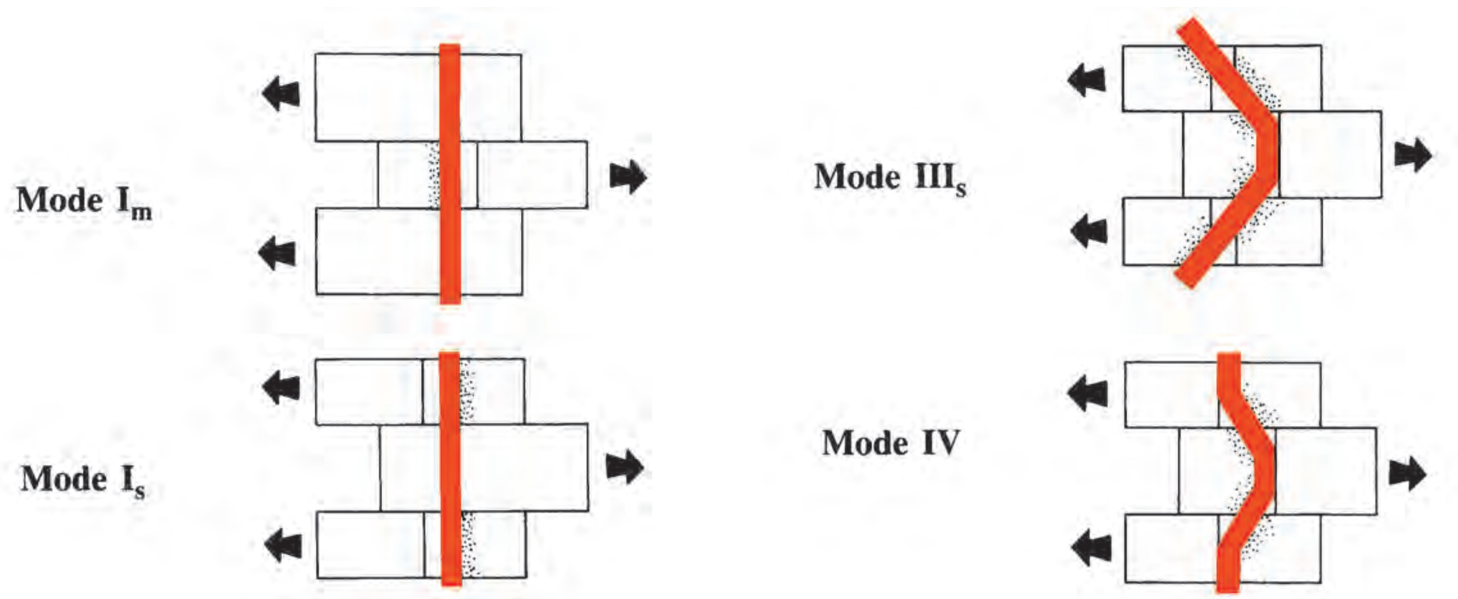

Courtesy American Forest & Paper Association, Washington, D.C.

Fig. 4. Double-shear connections in the European Yield Model. Mode I_m is the bearing failure mode for the tenon and Mode I_s the bearing failure mode for the sidewall of the mortise. Mode III_s is a combination of peg bending and shear failure at the tenon, and crushing of fibers in contact with the peg. Mode IV involves peg bending and shear failure both at the tenon and in the mortise wall, as well as crushing of fibers on each side of the tenon.

Recommended Peg Detailing

Species	Edge Dist	End Dist	Spacing
Douglas Fir	2.5	2	2.5
E.White Pine	4	4	3
Rd.+ Wh. Oak	2	3	2.5
S.Yellow Pine	2	2	3

R.J. Schmidt and Garth Scholl

Fig. 6. Schmidt and Scholl's recommended minimum distances expressed in peg diameters for peg centerline distance from face of mortised beam (Edge Distance), peg centerline distance from end of tenon (End Distance) and peg center-to-center distance in case of multiple pegs (Spacing). Tenon edge distance recommendations not given.

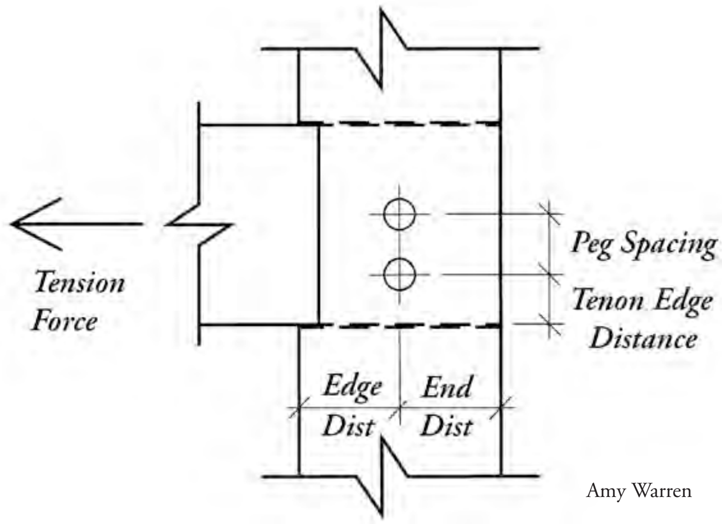

Amy Warren

Fig. 7. Typical joint in tension with critical peg distances labeled.

These papers are extremely useful references. However, the supporting testing and modeling used primarily pegs ¾ to 1 in. dia. One advantage of such small pegs is that their joints will likely fail in a ductile manner (usually peg shear and bending). As the pegs bend, the joint opens, giving visible evidence that the joint is overloaded. In addition, broken pegs are easy to knock out and replace. Conversely, such pegs result in relatively weak, flexible tension joints that contribute little to demanding timber frame structures such as trusses, hammerbeam frames or open frames with wind braces, and their use can require heavier timbers at compression joinery locations. This can lead to inefficient use of timbers or the need for more-expensive steel connections.

The use of larger pegs (1¼ in. to 1½ in. or more) results in stiffer, stronger pegged tension joints that share load with compression joints more effectively. However, larger pegs do not preclude brittle failure modes from limiting joint capacity. It's obviously undesirable to have brittle failures, since they can lead to failure of a structure, but in structural engineering it's a well-established design approach to permit a brittle failure mode to control as long as an appropriate factor of safety is incorporated. This ensures that stresses under service loads don't approach the breaking point too closely. (Unreinforced concrete and masonry design are two common cases for such an approach.) Ideally, calculating a reliable capacity for each mode of failure, whether brittle or ductile, will allow design of any joint configuration. Let's examine each failure mechanism.[4]

Relish Failure. Brittle failure of the tenon relish occurs when the volume of wood between the peg and the end of the tenon shears out (Fig. 8).

A conservative relish capacity can be calculated by taking the total shear area *A* (tenon thickness times twice the relish end distance per peg) and multiplying it by the adjusted value of F_v from the *NDS:*

$$V_{relish} = A \times F_v^{*}$$

A possible though infrequent tenon failure mode is tensile rupture where the tenon section is reduced at the peg holes. The reduced cross-sectional tenon area times the allowable tensile stress parallel to the grain gives the tenon capacity for that failure mode. To prevent tensile failure of the tenon between the peg and the tenon edge in combination with tenon shear failure, a minimum tenon edge distance of 1.5 peg diameters is recommended. A minimum tenon thickness of 2 in. helps to preclude tenon tension, shear and bearing problems. Thicker tenons and larger pegs are often appropriate for large timbers with high joint loads. The recommended tenon end distance provided as a multiple of peg diameter (Fig. 6) can be followed in lieu of calculating tenon capacity.

The effect of drawboring on tenon capacity and joint stiffness has not been exhaustively tested, but Schmidt and Scholl recommend increasing the tenon end distance by one peg diameter for drawbored joints. Drawboring with larger diameter pegs may not be effective because their stiffness does not permit initial bending of the pegs, and a smaller offset in the drawbore is needed to prevent relish failure.

Relish shear failure is also a failure mode of some nonpegged tension joints such as scarf, wedged Dutch through-tenon and dovetail joints. Shear failure planes of the latter two joint types are shown in Fig. 9. If bearing against the tenon and wedge does not control, the joint capacity can be calculated by multiplying the shear area by the adjusted value of F_v.

Mortise Face Splitting. Mortise face splitting is the most difficult failure mechanism to predict, first because it results from tension perpendicular to the grain, for which allowable stress values are as yet virtually undocumented, and, second, because it depends on joint geometry, including peg diameter and mortise edge distance, whose effects on mortise splitting capacity have not been thoroughly tested or quantified. A split mortise is shown in Fig. 10.

Joe Miller, University of Wyoming

Fig. 8. Tenon relish shear failure, a brittle failure mode in pegged tension joints. Specimen did not enjoy recommended end distance and also sustained partial tensile failure, perhaps due to a material flaw.

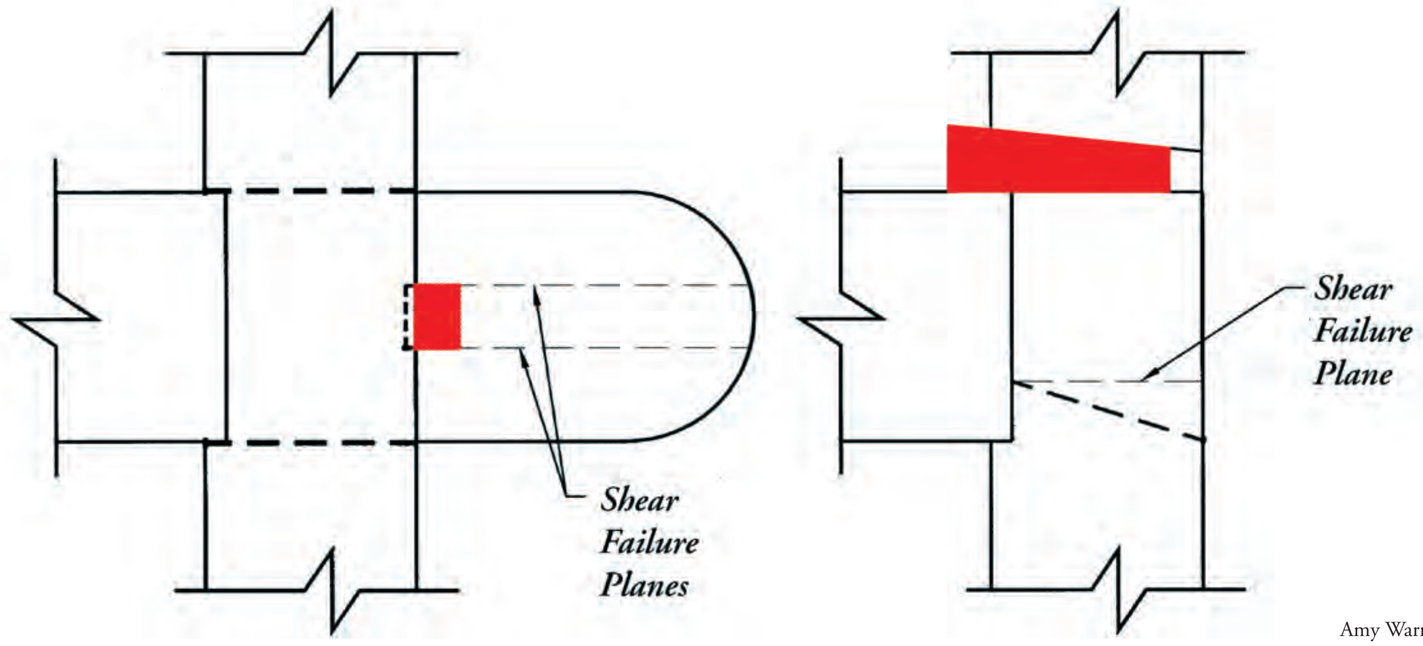

Amy Warren

Fig. 9. Shear failure modes for Dutch anchorbeam through-tenon and for half-dovetail tenon joints under tension loads.

When a pegged joint is loaded, the peg bends and fibers at the adjacent edges of the mortise and tenon may crush slightly, allowing further peg bending. This peg deformation can induce prying against the inside face of the mortise, causing tensile stress concentrations perpendicular to the grain at those locations and promoting mortise face splitting, which can quickly progress from small fractures at those highly stressed points. Using larger, stiffer pegs results in less deflection and prying action. Since peg bending stiffness is a function of diameter to the fourth power, a modest increase in peg size produces a significant increase in stiffness: a 1½-in.-dia. peg is approximately five times stiffer than a 1-in. peg.

In addition, the greater the mortise edge distance, the greater the ability of the mortise face material to span across the joint and distribute tensile stresses over a larger area. The rigidity of the mortise face material is also an exponential function of the edge distance. Mortise wall thickness likely influences splitting capacity of the joint in two ways. The thicker the mortise walls, the more area available to resist tension perpendicular to the grain and the more restraint provided to the ends of the pegs against bending.

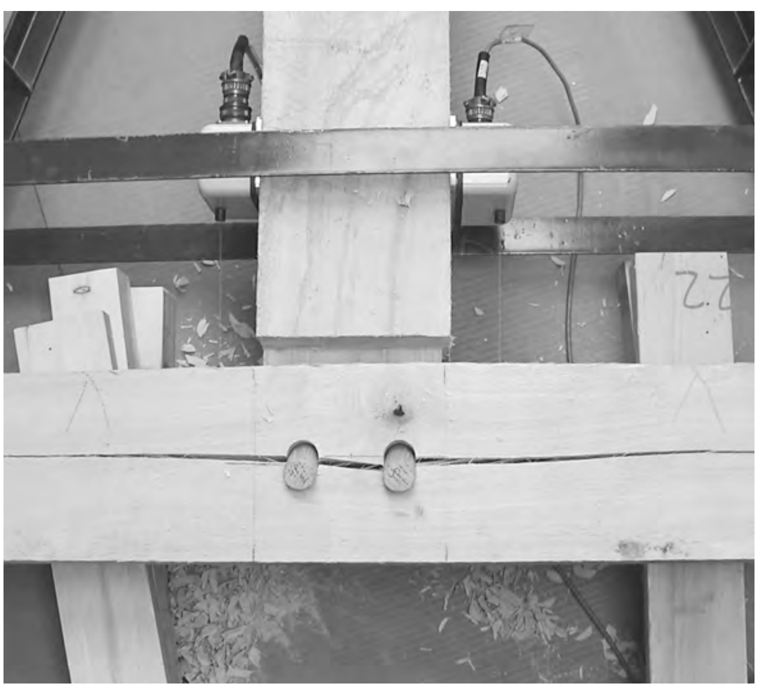

Joe Miller, University of Wyoming

Fig. 10. Sudden failure of a mortise face during testing of a yellow poplar joint with 1-in. red oak pegs at the University of Wyoming. Timbers were 6 x 6, mortise edge distance was three peg diameters.

In the case of a housed joint, the mortise edge distance can usually be taken as the distance from centerline of peg to face of post, instead of to shoulder housing face, unless the ability of the face material to span across the joint housing is compromised by very long housing faces (parallel to the grain of the mortise), or termination of the mortised timber very close to the joint. The recommended mortise edge distance for pegged joints to prevent mortise face splitting is also given as a multiple of peg diameter (Fig. 6).

These proposed distances do not account for the nonlinear relationships between peg diameter and prying action, mortise edge distances and tensile stress distribution perpendicular to the grain for pegs larger than 1 in. in diameter. Also, note that for Eastern white pine, the recommended mortise edge distance is four peg diameters, which can be difficult to satisfy with typical member sizes when using larger pegs. Although the *NDS* also assigns edge distance for fasteners loaded perpendicular to the grain as a multiple of fastener diameter (*NDS* 11.5), wooden pegs are typically larger than steel fasteners, and the recommended peg edge dimensions occasionally seem overly conservative compared to values for steel fasteners of similar stiffness, particularly for white pine. For instance, two ⅝-in.-dia. bolts in a double shear tension connection similar to that shown in Fig. 7 (a typical mortise and tenon joint), using Eastern white pine and a 2-in.-thick tenon in an 8-in. post, can carry 1870 lbs and require a mortise edge distance of four diameters—only 2 ½ inches. On the other hand, two 1½-in.-dia. white oak pegs, whose bending stiffness is similar to that of the ⅝-in. bolts, have in the same joint configuration an allowable load of 3254 lbs, but require a very generous 6 in. of edge distance. This configuration offers less than twice the capacity while using more than twice the edge distance.

Of course, detailing values for peg diameters over 1 in. would be extrapolating beyond the scope of Schmidt and Scholl's table, so their applicability is uncertain. In any case, more testing could establish allowable tensile stresses perpendicular to the grain and refine the recommended edge distances to better account for joint behavior and peg stiffness, as well as include recommendations for larger pegs, or even provide a method for calculating mortise splitting capacity for any joint layout and peg size. Perhaps allowable tensile stress perpendicular to the grain would prove, with more testing, to be as predictable as allowable shear stress parallel to the grain, since both types of stress can result in brittle failures.

Bearing Failure. The failure mode that produces crushing of fibers in the peg, tenon or mortise involves three equations to calculate the bearing capacity of each element. The equations are based on EYM failure mode I_m for the peg or the tenon and mode I_s for the mortise or side material (Fig. 4). The allowable bearing loads per peg, including a safety factor of 2 (Schmidt and Daniels, 1999), are

$$P_{\text{allow peg}} = 1/2\ D\ t_t\ F_{\text{e peg}}$$
$$P_{\text{allow tenon}} = 1/2\ D\ t_t\ F_{\text{e tenon}}$$
$$P_{\text{allow mortise}} = 1/2\ 2\ D\ t_m\ F_{\text{e mortise}}$$

where D is the peg diameter, t_t the tenon thickness, t_m the thickness of one side of the mortise, and F_e the dowel bearing strength of the respective elements given by three formulas, the first from Schmidt and Daniels (1999), the others from *NDS* Table 11.3.2:

$$F_{\text{e peg}} = 5650\ G^{2.04}$$
$$F_{\text{e tenon}} = F_{e\parallel} \text{ from NDS} = 11{,}200\ G$$
$$F_{\text{e mortise}} = F_{e\perp} \text{ from NDS} = 6{,}100\ G^{1.45} / \sqrt{D}$$

The three bearing equations were developed under a 10-minute wind load duration. They must be modified for other loads by multiplying the values by the appropriate load duration factor, C_D, from the *NDS* divided by the C_D for wind of 1.6.

Extrapolating the bearing equations for larger diameter pegs seems within reasonable engineering practice, since the effect of larger pegs in these failure modes is simply greater bearing area, and a reduction in $F_{e\perp}$, which is inversely proportional to fastener diameter. Fig. 11 below shows a tenon that crushed against its pegs, elongating the peg holes and contributing (along with peg bending) to significant joint deformation during testing.

Amy Warren

Fig. 11. Bearing failure (elongation of peg holes) of the 2-in.-thick tenon in a red pine tension joint test. Pins were 1-in. oak.

Peg Shear. Peg shear is our final failure mode in joint design and frequently the controlling one. Pegs normally deform under a combination of bending and shear slippage parallel to the grain, and occasionally tensile rupture of fibers due to bending (Fig. 12).

Cross-grain shear is typically not a limiting factor. The illustrations of EYM yield modes IIIs and IV in Fig. 4 show typical behavior of the joint under peg failure, including the mortise and tenon crushing that promotes peg bending. The softer the material surrounding the peg, the greater the peg's deformation at the mortise and tenon interface and the greater its effective span on each side of the tenon. A flexible peg further aggravates this crushing by not effectively distributing bearing stresses uniformly to the tenon and mortise. A loose fit between the tenon and the mortise can also exacerbate peg bending. The peg capacity as well as joint stiffness thus are dependent on the bearing capacity of the peg and the surrounding material, peg bending stiffness and workmanship. The proposed equation (Schmidt and Daniels 1999) for calculating shear capacity per peg is
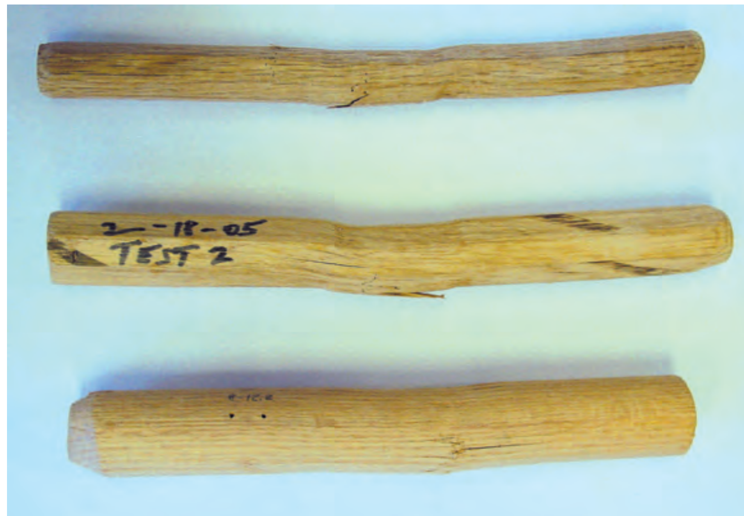
Amy Warren

Fig. 12. 1-in., 1¼-in. and 1½-in. diameter pegs that failed during testing of pine and Douglas fir joints. Note the tensile fractures.

$$V_{peg} = F_{\text{v peg}}\ 2D^2\ \pi / 4$$

where $2D^2\ \pi / 4$ is the total peg shear area on each side of the tenon. The allowable peg shear stress, $F_{v\ peg}$, is a curve-fit function of the specific gravity of the peg and surrounding material given by Schmidt and Miller (2004) in the equation

$$F_{\text{v peg}} = 1365\ G_{mortise}^{0.778}\ G_{peg}^{0.928}$$

This equation includes a safety factor of 2.2 and can be directly modified by the load duration factor from the *NDS*. As with the recommended peg detailing distances, the appropriateness of using these equations to design larger pegs has not been verified by testing, but it seems to result in conservative values, particularly since the greater stiffness of large pegs is neglected in calculating the allowable peg shear stress.

Holly Gorrel

Fig. 13. Selman Memorial Pavilion, Angola, Indiana, engineered by the authors. Pegged tension braces maximize frame efficiency in resisting wind loads.

Thistlewood Timber Framing

Fig. 14. Raising of Refuge Golf Club, Minneapolis, engineered by the authors. Trusses span 50 ft. Interior support induced high tensile forces in web members; steel pins were unavoidable.

CONCLUSION. The challenge of timber frame engineering is increasing along with the demand for efficient frames with high-strength tension connections that must simultaneously satisfy many clients' preference for traditional pegged joinery, a program requiring sophisticated analysis (Figs. 13 and 14). Yet timber frame joinery design standards available to engineers for such ambitious structures are still in their infancy. Recent research has contributed a great deal toward advancing design methods; we are well beyond where we were ten years ago. However, further testing and study of tension joints could broaden the scope of the current recommendations for joint layout. In particular, more research could help to develop methods for estimating tension joint stiffness values for more accurate frame analysis, and quantify the strength of joints against mortise face splitting. It could also validate the use of the peg bearing and peg shear design equations as well as of peg detailing recommendations for larger pegs and, not least, create a larger pool of data to increase the statistical reliability of the current recommendations. —AMY R. WARREN AND TOM NEHIL

Amy Warren, P. E. (awarren@nehilsivak.com), is a project engineer at Nehil•Sivak, Kalamazoo, Mich., with a BSE (Civil) from Case Western Reserve and an MSE (Structural) from the University of Michigan. Tom Nehil, P.E. (tnehil@nehilsivak.com), is a principal at Nehil•Sivak with a BSE from the U. of Michigan and experience as a carpenter, an engineering instructor and a timber framer for Tillers International.

Notes:

[1]See Rick Sasala, "Notched vs. Mortised Joinery," TF 43, March 1997.

[2]Two-peg joint stiffness values for joints with 1¼-in. and 1½-in. white oak pegs have ranged in our tests between 30 and 100 kips/in. See also Erikson and Schmidt "Laterally Loaded Timber Frames I, One-Story Frame Behavior," TF 62, December 2000, and Schmidt and Scholl (2000) for additional joint stiffness values.

[3]See *AITC 104 Typical Construction Details* for fastening examples.

[4]See Kessel and Augustin, "Load Behavior of Connections with Oak Pegs 1&2," TF 38, December 1995 and TF 39, March 1996.

References:

AFPA (2005). *National Design Specification for Wood Construction*, American Forest & Paper Association (AFPA), Washington, D.C.

Research Reports, University of Wyoming, Laramie:

Schmidt, R.J. and Daniels, C.E. (1999). "Design Considerations for Mortise and Tenon Connections";

Schmidt, R.J. and Scholl, G.F. (2000). "Load Duration and Seasoning Effects on Mortise and Tenon Joints";

Schmidt, R.J. and Miller, J.F. (2004). "Capacity of Pegged Mortise and Tenon Joinery."


mafell
SG 230
Slot Mortising Attachment
ZB 400 / 600 E
Carpentry Drilling
Machines
KSS 400
Cross-Cutting System
The widest range of
specialized machines
for timber framing
The only yardstick for professional woodworking is quality from start to finish. For decades this has been MAFELL's guiding principle, reflected in its comprehensive range of high-quality woodworking machines. Any craftsman geared to efficiency these days knows the importance of the right tools. For joiners and carpenters alike, there is only one choice - the experience and quality offered by MAFELL.
The right choice for all professionals: the benefits of reliability, flexibility, precision and durability.
Please call us!
We can provide leaflets with detailed information and all technical data.
MAFELL North America Inc.
435 Lawrence Bell Dr., Suite 3 • Williamsville, N.Y. 14221
Phone (716) 626-9303 • FAX (716) 626-9304
E-mail: mafell@msn.com • www.mafell.com
www.mafell.com


Custom Timber Packages
Forest Salvaged Standing Dead
Douglas-Fir & Ponderosa Pine
Sometimes Being Dead can be a Good Thing
Fresh sawn
Eastern White Pine • Cedar • Oak • Doug-Fir
Decking
Douglas-Fir • Southern Yellow Pine
Quick Quote Turn-around • Short Lead Time
High Quality Timbers • Personal Service
Toll Free
866-898-1655
Clark's Fork Timber
www.clarksforktimber.com


Precision Portable Chainsaw Mills
Chainsaw Miter Mill
Cut up to 70° angles. + or - 1/4° accuracy
Chainsaw Micro Mill
Convert any size chainsaw into a portable saw mill
High Precision Kit
Achieve a level of accuracy never seen with a chainsaw
Dovetail Jointed Toolboxes
Transport or store all your chainsaw mills
ACCUTECH
INNOVATIONS INC
For more info: 1-866-202-2345
www.accutechinnovations.com


ESL
EVERGREEN SPECIALTIES LTD.
Supplier of an unrivaled selection of
Architectural Timber, Lumber & Logs
for all interior and exterior applications
Custom sawn & remanufactured, for
value seeking Professional Timber Framers
Bruce Lindsay
877 988 8574
Lumberman since 1973
Fax 604 988 8576

PUBLISHED BY
THE TIMBER FRAMERS GUILD
PO BOX 60, BECKET, MA 01223

NON-PROFIT ORG.
U.S. POSTAGE
PAID
BARRE, VT
PERMIT NO. 222

Steve Morrison

The Suriname Pavilion frame, raised by a Guild party at the end of last November at Foengoe Island on the Coppename River in the heart of the 4-million-acre Suriname Nature Reserve. Frame used 26,000 bd. ft. of kope, brownheart and purpleheart. When covered, it will serve as a visitor center for Conservation International, an American bio-diversity group that works in 40 countries and seeks to encourage eco-tourism in the reserve. *Story page 12.*